Design of Mechanical Systems for a Cultural Center in Hebron

By

Luqman Shakhtour

Supervisor: Eng. Kazem Osaily

Submitted to the College of Engineering

in partial fulfillment of the requirements for the

Bachelor degree in mechanical Engineering

Palestine Polytechnic University

May 2018

Dedication

إلى خاتم الأنبياء والمرسلين..أشرف الخلق... سيد المجاهدين... إلى المعلم الأول ....

سيدنا محمد (صلى الله عليه وسلم)

إلى الحضن الدافئ المعطر بأريج الوطن.. إلى اليد التي اندسّت في خصال شعري.. ينبوع الصبر والتفاؤل والأمل.. رمز الحب وبلسم الشفاء.. إلى القلب الناصع بالبياض

إليك (أمي)

إلى من أحمل اسمه بكل فخر.. من اقتدي به منذ الصغر.. إلى ذلك الرجل الذي علمني العزة وكحل عيني بالكبرياء.. من علمني كيف الصعود والمثابرة.. إلى منارة دربي

إليك (أبي)

إلى سندي وقوتي وملاذي بعد الله.. من حفتني وإياهم ذكريات بيت واحد.. من اظهروا لي ما هو أجمل من الحياة

(إليكم أخوتي)

إلى من رافقني في دربي.. في السراء والضراء.. أخوتي بالله .. من أتمنى أن تبقى صورهم في عيوني

إليكم (أصدقائي)

إلى السنبلة الذهبية في بلادي وبيارات البرتقال.. كروم العنب وغصن الزيتون.. إلى رغيف الطابون وريح الزعتر

إليك (فلسطين)

إلى الذين قدموا ارواحهم ورووا الأرض بدمائهم.. إلى الابطال وقادة الثورة

شهداء فلسطين

إليكم جميعا أهدي فاتحة العطاء...على أمل البقاء بإذن الله عز وجل

Acknowledgment

My thanks firstly to my supervisor Eng. Kazem Osaily. He guides and support until made this work possible. His constant encouragement, intuitive wisdom, and resolute leadership were instrumental in completing this work .

My wishes and thanks to Dr. Ishaq sider and Eng. Mohammad Awad. And this work would not exist without their inspiration.

Thanks for every one helped to make this work successful.

And finally, our ultimate thanks to all lecturers, doctors, engineers, and to the great edifice of science, (Palestine Polytechnic University), for their effort and guidance which helped building our character to become successful engineers .

Abstract

This project aims to design mechanical systems for a cultural center in Hebron that consists of 2 floors , and total area about 2302 m^2, the design includes water networks, drainage system . Also the project concerns design of firefighting system , and heating ventilation air conditioning (HVAC) using (VRF systems).

يهدف هذا المشروع إلى تصميم الخدمات الميكانيكية لمركز ثقافي في مدينة الخليل والذي يتكون من طابقين ، والمساحة الإجمالية تقدر ب 2302 م2 يشمل على تصميم شبكات المياه وشبكات الصرف الصحي وأيضا يتضمن المشروع تصميم نظام إخماد الحرائق ونظام تكييف الهواء.

Table of Contents

Title **Page**

Dedication……II

Acknowledgment……...….III

Abstract……...……IV

Table of Contents……V

List of tables…….…. VII

List of Figure…….…….. VIII

Chapter One

Introduction

1.1 Introduction……2

1.2 Project Overview……2

1.3 Project Objective……...….2

1.4 Project Scope…….…….3

1.5 Project Outline…….……..3

1.6 Time planning……...…….4

Chapter Two

Heating load

2.1 Overview……..…….…….7

2.2 Thermal Comfort Criteria for Inside Design Condition…..……...…..7

2.3 Inside and outside condition.……...……..…..7

2.4 ASHRAE Comfort Chart.……..…….……...…..8

2.5 Convection heat transfer coefficient……...……9

2.6 Overall heat transfer coefficient …….……..11

2.7 Heating load calculation……...…....16

2.7.1 Overview...……...…….16

2.7.2 Heating load calculation…….….…17

2.7.3 Sample calculation..…….……..……..18

Chapter Three

Cooling load

3.1 Cooling load calculation ……...…..……...26

3.2Overview……..……..…..…..……..26

3.3 Cooling load calculation.……27

3.4 Sample calculation...……..……..28

Chapter four

Plumbing system

4.1 Introduction…….39

4.2 Water supply System……..39

4.3 Drainage System.……40

4.4 Water supply System calculation……...41

4.5 Pipe size calculation……..……...43

4.6 Design drainage system…….....44

4.7 Manholes calculation……...……...45

Chapter five

Fire Fighting System

5.1 Introduction……..48

5.2 Classification of Firefighting……..……....49

5.2.1 Water Firefighting system……..…….……....49

5.2.2 Gas Firefighting system……..…….……....51

5.2.3 Foam Firefighting system…….……..…….……....52

5.3 System selection and design……..…….…....52

5.3.1 Fire hous cabinet……...……..…….…....53

5.3.2 Pipe size calculation……..……..…….…...53

5.4 Firefighting pumps….……...…55

5.4.1 Types of pumps….…….…58

5.4.2 Flow rate calculations...…….…58

5.4.3 Head estimation……....…….…58

5.4.4 Pump selection……...…….…59

Chapter six

Variable Refrigerant Flow System

6.1 Variable refrigeration flow system……..……..……..……..62

6.1.1 Overview……..…….…..……..62

6.1.2 Variable refrigeration flow description ……..……..65

6.1.3 Types of VRF……..……..67

6.1.4 Refrigerant modulation in a VRF system ……..……..……...…..69

6.1.5 Design consideration for VRF system ……..……..…….…..76

6.1.6 Advantages of VRF system ……..……....……..77

6.1.7 Selection unit ……..……..……..……..77

6.2 Mechanical ventilation ……..……....79

6.2.1 Purposes of ventilation……..……..…..…..81

References……..……..……...82

Appendix A.……...……..….……83

Appendix B.……...……..…...…106

List of Tables

Table number	Description	Page #
Table (1.1)	The first semester time table	4
Table (1.2)	The second semester time table	5
Table (2.1)	Inside and outside design conditions	8
Table (2.2)	Sections for constructions	12
Table (2.3)	External wall construction	13
Table (2.4)	Internal wall construction	13
Table (2.5)	Celling construction (roof)	14
Table (2.6)	Floor construction	14
Table (2.7)	Heating load for each room in the building	24
Table (3.1)	Cooling load for each room in the building	37
TABLE(4.1)	WSFU for the Bathroom	42
TABLE (4.2)	WSFU for the bathroom in the ground floor	42
TABLE (4.3)	WSFU for bathroom in the first floor	43
TABLE (4.4)	The WSFU and gpm all floors	43
Table (4.5)	Pipe sizing risers (water supply system) for All floors	44
Table (4.6)	drainage fixture unit (dfu) table for the first stack	45
Table (4.7)	drainage fixture unit (dfu) table for the second stack	45

Table (4.8)	Calculation of the manholes	46
TABLE (5.1)	Pipe schedule - standpipes and supply piping	54
Table (6.1)	Selection indoor units for the building	78
Table (6.2)	Selection outdoor units for the building	79

List of Figures

Figure #	Description	Page #
Figure (2.1)	Human comfort chart	8
Figure (2.2)	Bed room dimensions	18
Figure (2.3)	Ceiling construction	19
Figure (3.1)	Source of cooling load	27
Figure(4.1)	Manholes details	46
Figure(5.1)	Fire tetrahedron	48
Figure (5.2)	Fire cabinet and hose reel	53
Figure(5.3)	Horizontal split case pump	56
Figure(4.4)	Inline fire pump	56
Figure (5.5)	End Suction pump	57
Figure (5.6)	Vertical turbine pump	57
Figure (5.7)	Pump details.	59

Figure (5.8)	Pump characteristic curve.	59
Figure(5.9)	Pump photo	60
Figure(5.1	Pump dimensional drawing	60
Figure (6.1)	VRF System with multiple indoor evaporate units	63
Figure (6.2)	A schematic VRF arrangement	64
Figure (6.3)	Separation and header tubes	64
Figure (6.4)	VRF heat pump systems	65
Figure (6.5)	Heat recovery type VRF system	67
Figure (6.6)	Basic refrigeration cycle	68
Figure (6.7)	Design limits in VRF system	71
Figure (6.8)	Design limits in (Fujitsu) VRF system	71
Figure (6.9)	Pipe sizing for VRF system	72
Figure (6.10)	Pipe work schematic	74
Figure (6.11)	VRV provides a total solution for integrated climate control	76
Figure (6.12)	Spilt and cassette indoor units	78

1.1 Introduction

Due to hot summer and cold winter, and sometimes the extreme weather in Hebron, air conditioning system must be installed in each building in order to people feel comfortable.

Fire safety is very important in all places. Without fire alarms, a lot of things may be lost like people and expensive things. In this case, firefighting system should be installed in the building.

In to the above, numerous systems also used in this building such as sanitary drainage system, water supply system and ventilation system.

1.2 Project overview

Throughout the ages the human beings was tried to improve their lifes to be easier and more comfortable, and as the wisdom says: "The necessity is the mother of invention" the engineers always try to meet the needs of humans to achieve the welfare of their lives. So HVAC engineers developed the mechanical services systems and technologies to achieve the comfort, which the humans needs in the buildings. For this reasons the mechanical system will be designed and documented in this project for Cultural Center in Hebron city in Palestine.

1.3 Project objectives

The following main points summarize the objectives of this project:

1. To calculate and design a Variable Refrigeration flow (VRF) air conditioning system.
2. To calculate and design the plumbing system including water supply and waste water systems for the Cultural Center.
3. To calculate and design suitable fire fighting system that covers the requirements of the building.

4. To prepare the required drawings for the relevant systems on Auto CAD program in details.
5. To select the required equipment of the systems.
6. To prepare suitable bill of quantities for the relevant systems.

1.4 Project scope

The scope of the project is to study and design the different mechanical systems needed inside the Cultural Center building this includes the following main topics:

1.Design the mechanical systems inside the Cultural Center.

2.Theoretical calculations and design of HVAC system.

3.Theoretical calculations and design of plumping system.

4.To be familiar with the mechanical drawings for different mechanical systems.

1.4 Building description

The building site is in Hebron . It consist of two floors, the area of each floor is 1151 m^2 .

1.5 Project outline

The project contain six chapters, these chapters are arranged as follows:

Chapter one: Introduction , This chapter includes overview about the project, project objectives, building description and time planning.

Chapter two: Heating Load ,This chapter consists of the procedures for calculating the heating load

Chapter three: Cooling Load ,This chapter consists of the procedures for calculating the cooling load

Chapter four : Plumping System

Chapter five : Fire Fighting system

Chapter six : Variable Refrigerant Flow system

1.6 Time Planning

Table (1.1): Time estimated to work for first semester

Week / Task	1	2	3	4	5	6	7	8	9	10	11	12	13	14	15
Choosing the Project idea															
Choosing the building plane and overview Previous projects															
Writing and Documentation															
calculations of Heating and cooling load															
Printing some copies for the supervisor and final copy															

`

The Second Semester Time Table

Table (1-2) Second Semester Time table.

Week / Task	1	2	3	4	5	6	7	8	9	10	11	12	13	14	15
Editing the first semester work															
Plumping system works with writing															
Fire fighting calculation															
Choosing the HVAC systems and vrf system works with writing in the cultural center															
Printing some copies for the supervisor and final copy															

Chapter Two

Heating Load

2.1 Overview

Heating and cooling loads are the measure of energy needed to be added or removed from a space by the HVAC system to provide the desired level of comfort within a space.

The heating and cooling load calculation is the first step of the iterative HVAC design procedure, a full HVAC design involves more than the just the load estimate calculation. Right-sizing the HVAC system, selecting HVAC equipment and designing the air distribution system to meet the accurate predicted heating and cooling loads begins with an accurate understanding of the heating and cooling loads on a space.

2.2 Thermal Comfort Criteria for Inside Design Conditions

The inside design conditions refer to temperature, humidity, air speed and quality of inside air that will induce comfort to occupants of the space at minimum energy consumption. There are several factors that control the selection of the inside design conditions and expenditure of energy to maintain those conditions:

1- The outside design conditions.
2- The period of occupancy of the conditioned space.
3- The level of activity of occupants in the conditioned space.

2.3 Inside and outside condition

The inside and outside conditions are obtained from Palestinian code as shown in the following Table [1]:

Table (2.1): Inside and outside design conditions

Property	Inside design condition		outside design condition	
	summer	winter	summer	winter
Temperature (˚C)	24	24	30	4
Relative humidity (%)	45	30	57	72
Wind speed (m/s)	0.1	0.35	1.4	1.4

2.4 ASHRAE Comfort Chart

ASHRAE is an abbreviation for the American Society of Heating Refrigerating and Air conditioning Engineers. Its Standard Thermal Environmental Conditions for Human Occupancy describes the combinations of indoor space conditions and personal factors necessary to provide comfort in the effective way. There are no static rules that indicate the best atmospheric condition for making all the individual comfortable because human comfort is affected by several factors such as health, age, clothing, etc. Figure 2.1 shows ASHRAE human comfort chart .

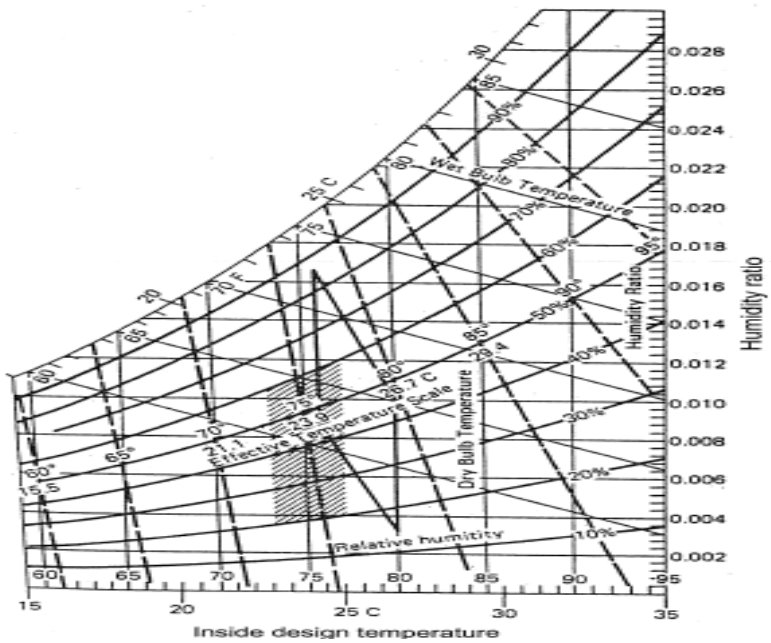

Figure (2.1): Human comfort chart

2.5 Convection Heat Transfer Coefficient

There are two ways to transfer heat by convection[2]:

i. Forced convection.
ii. Free convection.

Steps to calculate the forced heat transfer coefficient (h_o):

1. $T_f = \frac{Ts + T\infty}{2}$ (2.1)

   Where:

   T_f: film temperature, K

   Ts: surface wall temperature, K

   T_∞: ambient temperature, K

2. Find the fluid properties v, Pr and k

   Where:

   ν: kinematic viscosity, m^2/s

   Pr: Prandtl number

   k: thermal conductivity, W/m.K

3. $Re = \frac{v \times \mathbf{L}}{\nu}$ (2.2)

   If $Re < (5\times10^5)$ … Laminar flow

   If $Re \geq (5\times10^5)$ … Turbulent flow

   Where:

   Re: Reynolds number

L: reference length, m

ν: kinematic viscosity.

4. $Nu = 0.66\ Re^{0.5}\ Pr^{(1/3)}$ … Laminar flow (2.3)

$Nu = 0.037\ Re^{0.8}\ Pr^{(1/3)}$ … Turbulent flow (2.4)

Where:

Nu: Nusselt number

5. $h = \frac{Nu \times k}{L}$ (2.5)

Steps to calculate the free heat transfer coefficient (h_i):

1. $T_f = \frac{Ts + T\infty}{2}$
2. Find the fluid properties ν, Pr and k from Table A(2.1)
3. $Gr = g\beta(T_s - T_\infty)L^3 / \nu^2$ (2.6)

   $\beta = (1/T_f)$ (2.7)

   Where:

   Gr: Grashof number[3]

   g: gravitational acceleration , m/s^2

   β: coefficient of volume expansion, K^{-1}

4. $Ra = Gr \times Pr$ (2.8)

   If $Ra \leq 10^9$ … Laminar flow

   If $Ra > 10^9$… Turbulent flow

   Where:

   Ra: Rayleigh Number

5. For Laminar flow:

$$Nu_L = 0.68 + \frac{0.670Ra^{1/4}}{[1+(0.492/Pr)^{9/16}]^{4/9}} \quad (2.9)$$

For Turbulent flow:

$$Nu_L = [0.825 + \frac{0.387Ra^{1/6}}{[1+(0.492/Pr)^{9/16}]^{8/27}}]^2 \quad (2.10)$$

6. $h = \frac{Nu \times k}{L}$
7. Calculate the external convection heat transfer coefficient in heating load (h_o):
8. $T_f = (277.15+280.15)/2 = 278.65$ K

Using interpolation to find the fluid properties ν, Pr & k:

- $\nu = 14.9466\times10^{-6}$ m^2/s
- Pr = 0.709756
- k = 25.452×10^{-3} W/m.K

  $\beta = (1/291.4) = 3.4554\times10^{-3}$ K^{-1}

  $Gr = [9.81\times3.4554\times10^{-3*}(20-12.5)\times 3^3]/ [14.9466\times10^{-6}] = 3.0727\times10^{10}$

  $Ra = (3.0727\times10^{1})(0.709756) = 2.181\times10^{10}$ »»» Turbulent flow

  $Nu = [0.825 + ((0.387(2.181\times10^{10})^{(1/6)})/ ((1+ (0.492/0.709756)^{(9/16)}))^{(8/27)}]^2 =$ 323.02

  $h_i = (323.02\times25.452\times10^{-3})/3 = 2.741$ $W/m^2.^\circ C$

The same procedures are used to calculate convection heat transfer coefficient in cooling load:

$h_o = 29.67$ $W/m^2.^\circ C$

$h_i = 1.7885$ $W/m^2.^\circ C$

6 - Overall Heat Transfer Coefficient

The overall heat transfer coefficient is a measure of the overall ability of a series of conductive and convective barriers to transfer heat.

To calculate the heat gain from walls, ceiling, ground and doors, one need to calculate the value of overall heat transfer coefficient (U) for each one of them.

The value of U is depends in the kind of material that content in walls ,ceiling…. etc .

The amount of load either heating or cooling (from walls , doors… etc) is directly proportional with the value of the U. [1]

U_{out} = Overall heat transfer coefficient for the outside walls of the rooms.

U_{in} = Overall heat transfer coefficient for the internal walls of the rooms.

$U_{ceiling}$ = Overall heat transfer coefficient for the ceiling of the rooms.

U_{floor} = Overall heat transfer coefficient for the ground of the rooms.

U_{doors} = Overall heat transfer coefficient for the doors of the rooms.

U_{glass} = Overall heat transfer coefficient for the glass of the rooms.

The construction of layers is different from wall to wall so, Table (2.2) shows the sections for the construction layers in the building for each combination.

Table (2-2) : Sections for constructions

Construction	Construction detail	Construction material
External walls	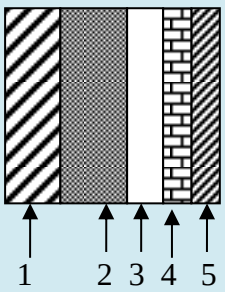	1- Hard stone 2-Concrete 3-Polystyrene 4- Brick 5- Plaster

Internal walls	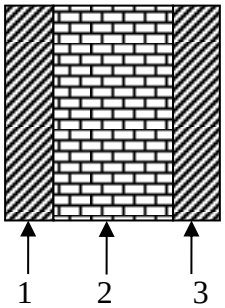	1- plaster 2- Block 3- plaster
Ceiling	1 2 3 4 5 6 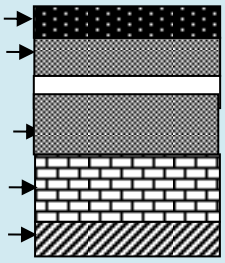	1- Asphalt mix 2- Concrete 3- Polystyrene 4- Reinforced concrete 5- Hollow brick 6- plaster
Floor	1 2 3 4 5 6 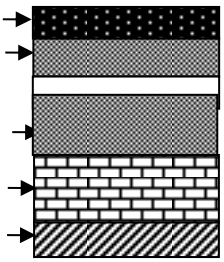	1- Ceramic tiles 2- Mortar 3- Aggregates 4- Concrete 5- Polystyrene 6- Reinforced concrete

The construction of walls, ceilings and floors are chosen as follows tables:

Table (2.3): External walls constructions

Material	ΔX(m)	k(W/m.°C)
Hard stone	0.05	1.7
Concrete	0.15	1.75
Polystyrene	0.03	0.034
Brick	0.07	0.95
Plaster	0.02	1.2

Table (2.4): Internal walls (partition) constructions

Material	ΔX(m)	k(W/m.°C)
Plaster	0.02	1.2
Brick	0.1	0.95
Plaster	0.02	1.2

Table (2.5): Ceiling constructions

Material	ΔX(m)	k(W/m.°C)
Asphalt mix	0.02	0.70
Concrete	0.05	1.75
Polystyrene	0.025	0.034
Reinforced concrete	0.06	1.75
Hollow brick	0.18	0.95
Plaster	0.02	1.2

Table (2.6): Floor constructions

Material	ΔX(m)	k(W/m.°C)
ceramic tiles	0.02	1.10
Mortar	0.02	0.16
Aggregates	0.10	1.05
concrete	0.05	1.75
Polystyrene	0.03	0.034
Reinforced concrete	0.06	1.75
Hollow brick	0.18	0.95
Plaster	0.025	1.20

Calculation of overall heat transfer coefficient for walls ,partition, ceiling and floor :

$$U = \frac{1}{\Sigma\, Rth} = \frac{1}{\mathrm{Rin} + \Sigma\frac{\Delta x}{K} + \mathrm{Rout}} \quad (2.11)$$

Where:

Δx: the thickness of the wall.

R_{in}: inside film resistance.

Rout: Outside film resistance.

For walls:

R_{in} and R_{out} for the external walls as 0.12 and 0.06 (m^2/W. °C), respectively .

$$\text{Uout} = \frac{1}{\text{Rin} + \frac{\Delta x_{st.}}{k_{st.}} + \frac{\Delta x_{con.}}{k_{con.}} + \frac{\Delta x_{poly.}}{k_{poly.}} + \frac{\Delta x_{Brick}}{k_{Brick}} + \frac{\Delta x_{plaster}}{k_{plaster}} + \text{Rout}}$$

$$= \frac{1}{0.12+\frac{0.05}{1.7}+\frac{0.15}{1.75}+\frac{0.03}{0.034}+\frac{0.07}{0.95}+\frac{0.02}{1.2}+0.06}$$

$= 0.788\ (\mathrm{W}/m^2.°\mathrm{C})$.

for the internal walls :

Similarly, $U_{w,\,int} = 2.567(\mathrm{W}/m^2.°\mathrm{C})$

For ceiling:

Because of its construction, the ceiling is divided into two overall heat transfer coefficient one with brick and the other without.

R_{in} and R_{out} for the ceiling are 0.1 and 0.04 $(m^2/\mathrm{W}.°\mathrm{C})$, respectively .

$$U_1 = \frac{1}{\text{Rin}+\frac{\Delta x_{asph.}}{k_{asph.}}+\frac{\Delta x_{conc.}}{k_{conc.}}+\frac{\Delta x_{poly.}}{k_{poly.}}+\frac{\Delta x_{conc.}}{k_{conc.}}+\frac{\Delta x_{Brick}}{k_{Brick}}+\frac{\Delta x_{Plaster}}{k_{Plaster}}+\text{Rout}}$$

$$= \frac{1}{0.1+\frac{0.02}{0.70}+\frac{0.05}{1.75}+\frac{0.025}{0.034}+\frac{0..06}{1.75}+\frac{0.18}{0.95}+\frac{0.025}{1.2}+0.04}$$

$= 0.849(\mathrm{W}/m^2.°\mathrm{C})$.

Similarly, $U_2 = 0.917(\mathrm{W}/m^2.°\mathrm{C})$

For partition:

$R_{in} = R_{out} = 0.12\ (m^2/\mathrm{W}.°\mathrm{C})$.

$$Up = \frac{1}{\text{Rin} + 2 \times \frac{\Delta x_{Plaster}}{k_{Plaster}} + \frac{\Delta x_{Brick}}{k_{Brick}} + \text{Rin}}$$

$$= \frac{1}{0.12+2\times\frac{0.02}{1.2}+\frac{0.1}{0.95}+0.12}$$

$= 2.642(\mathrm{W}/m^2.°\mathrm{C})$.

For floor:

As the same ceiling, we divided the construction into two parts.

R_{in} = 0.15 $(m^2/\mathrm{W.°C})$,

$$U1 = \frac{1}{\mathrm{Rin} + \frac{\Delta x_{ceramic}}{k_{ceramic}} + \frac{\Delta x_{mortar}}{k_{mortar}} + \frac{\Delta x_{aggregates}}{k_{aggregates}} + \frac{\Delta x_{con.}}{k_{con.}} + \frac{\Delta x_{poly.}}{k_{poly.}} + \frac{\Delta x_{con.}}{k_{con.}} + \frac{\Delta x_{Brick}}{k_{Brick}} + \frac{\Delta x_{Plaster}}{k_{Plaster}}}$$

$$= \frac{1}{0.15 + \frac{0.02}{1.1} + \frac{0.02}{0.16} + \frac{0.10}{1.05} + \frac{0.05}{1.75} + \frac{0.03}{0.034} + \frac{0.06}{1.75} + \frac{0.18}{0.95} + \frac{0.02}{1.2}}$$

$$= 0.649(\mathrm{W}/m^2.°\mathrm{C}).$$

Similarly, U_2 = $0.688(\mathrm{W}/m^2.°\mathrm{C})$

For window:

$Ug = 3.2$ $(\mathrm{W}/m^2.°\mathrm{C})$ for double glass aluminum frame.

For door:

$Ud = 2.4$ $(\mathrm{W}/m^2.°\mathrm{C})$ for 50 mm wood door type.

For un condition :

$$Uun. = \frac{1}{\mathrm{Rin} + 2 \times \frac{\Delta x_{Plaster}}{k_{Plaster}} + \frac{\Delta x_{con.}}{k_{conc}} + \mathrm{Rout}}$$

$$= \frac{1}{0.12 + 2 \times \frac{0.02}{1.2} + \frac{0.2}{1.75} + 0.06} = 3.053\ (\mathrm{W}/m^2.°\mathrm{C}).$$

2.7 Heating load calculation:

2.7.1 Overview:

Heating load is the rate at which heat energy must be supplied to a space to maintain a given inside design condition.

The heating load of a building consists of the following components:

i. Heat loss through all exposed walls, ceiling, floor, windows, doors, and walls between a heated space and an unheated space (partition walls).
ii. Heat load required to warm outside cold air infiltrated to heated space through cracks (clearances) of windows and doors, and outside cold air infiltrated due to opening and closing of doors.
iii. Domestic hot water load.
iv. Miscellaneous loads such as emergency heating loads and safety factor heating load. [1]

2.7.2 Heating Load Calculations

The general procedure for calculating the total heating load is:

1. Select the design outdoor air conditions of temperature, humidity, and wind speed and its direction.
2. Select the comfort design indoor conditions of temperature and relative humidity that must be maintained in the heated space.
   $\Delta T = T_{in} - T_{out}$
3. Estimate temperature in adjacent unheated spaces, if any.
   $\Delta T_{un} = 0.5\ (T_{in} - T_{out})$ (2.12)
4. Compute the overall heat transfer coefficients for all exposed surfaces of the building through which heat losses are to be calculated.
5. Determine all surface areas through which heat is lost.
6. Compute the heat loss for each type of walls, floor, ceiling or roof, doors, windows, etc. by using this equation
   $\dot{Q} = UA\ (T_{in} - T_{out})$ (2.13)
   Where:
   $\dot{Q}$: rate of heat transfer (W)
   U: overall heat transfer coefficient $(W/m^2.°C)$.
   A: heat transfer area (m^2)
   T_{in}: inside design temperature (°C).

T_{out}: outside design temperature

7. Compute heat loss from bellow-grade walls and floor, if any.
8. Calculate the infiltration air rate and compute the resulting heating load due to infiltration.
9. Assume a safety factor value of 10 to 15% to account for emergency loads.
10. The sum of all the above heat losses for all rooms represents the total heating load of the building.[4]

2.7.3 Sample Calculation

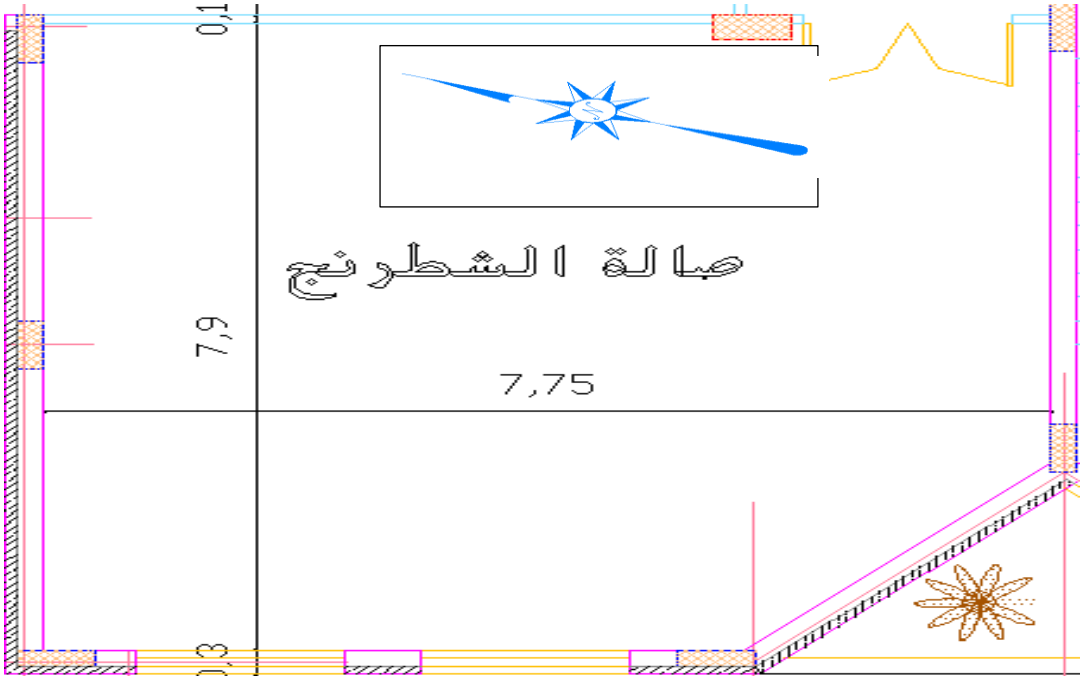

Figure (2.2): Sample chess room dimensions

Calculation of the heat loss from the room in the last floor as a sample :

The height of the room = 3.45 m

The height of the windows = 2.13 m

Heat loss through ceiling ($\dot{Q}_c$) :

Because of its construction, the ceiling is divided into two areas which are area A_1 and area A_2 as showing in Figure (2.3).

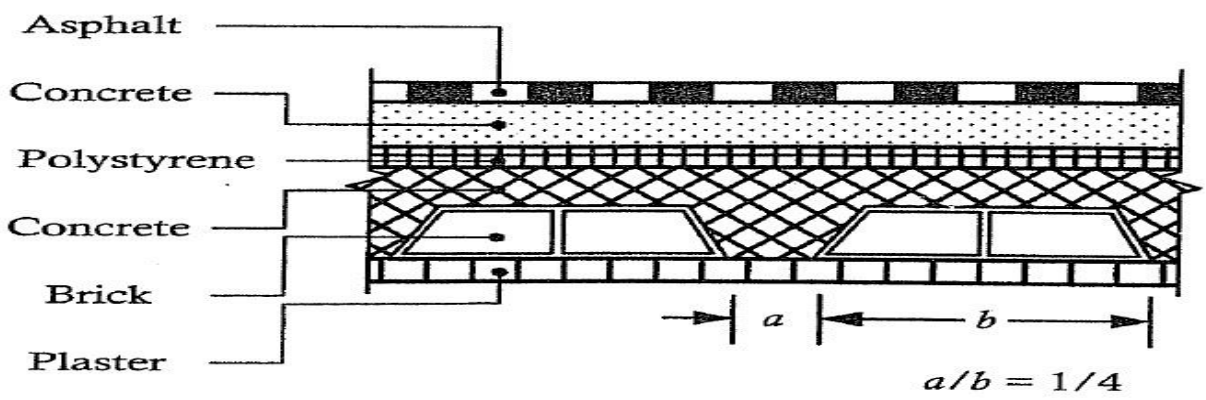

Figure (2.3): Ceiling construction

The area A_1 is equal to:

$$A_1 = \frac{4}{5} A_c$$

$$= \frac{4}{5} (61.225)$$

$$= 48.98 \text{ m}^2$$

And the area A_2 is equal to:

$$A_2 = \frac{1}{5} A_c$$

$$= \frac{1}{5} (61.225)$$

$$= 12.245 \text{ m}^2$$

Heat loss through walls ($\dot{Q}_f$) :

$\dot{Q}_f = U_f A_f (T_i - T_o)$ (2.14)

$\dot{Q}_f = (0.649 \text{ x} 58.4)(24 - 8)$

$\dot{Q}_f = 606.4$ W

Heat loss through walls ($\dot{Q}_w$) :

The external wall area is

$A_{w,ex}$ = (8.3x3.45) + (7.75x3.45)

=55.37 m^2

The heat loss from external wall is

$\dot{Q}_{w,ex} = (U_{w,ex} A_{w,ex})(T_i - T_o)$

= (0.788× 55.37) (24-4)

= 872.63W

Heat loss through windows ($\dot{Q}_g$):

$\dot{Q}_g = U_g A_g (T_i - T_o)$

=(3.2)(7.27)(24-4)

= 465.28 W

Heat loss through internal door ($\dot{Q}_d$) :

$\dot{Q}_d = U_d A_d (T_i - T_{un.})$

=(2.4)(1.28)(24-10)

= 43W

Heat loss through internal wall ($\dot{Q}_{w\ int}$) :

$A_{w\ int}$ =(5.388×3.45)+(7.9×3.45)+(5.15×3.45)-A_d

=62.33 m^2

$\dot{Q}_{w\ int}=(U_{w\ int} A_{w\ int})(T_i - T_o)$

=(2.567× 62.33)(24-10)

=2240w=2.24 kW

Heat loss through infiltration ($\dot{Q}_{inf}$) :

Infiltration is the leakage of outside air through cracks and clearances around the windows and doors. The amount of infiltration depends mainly on the tightness of the windows and doors on the outside wind velocity or the pressure difference between the outside and inside of the room.

The total heat load due to infiltration is given by the equation

$$\dot{Q}_{inf.,g} = \frac{\dot{V}f}{vo} (h_i - h_o) \quad (2.15)$$

Where:

hi: the enthalpy of the inside air(kJ/kg)

ho: the enthalpy of the outside air (kJ/kg)

$\dot{V}f$: The volumetric flow rate of infiltrated air in (m^3/s)

vo : Specific volume in(m^3/kg)

$$\dot{V}f = K \times L \; [0.613 \, (S_1 \times S_2 \times V_o)^2 \,]^{2/3} \quad (2.16)$$

Where :

K = the infiltration air coefficient.

L: the crack length in meter.

S_1: factor that depends on the topography of the location of the building

S_2: coefficient that depends on the height of the building.

V_o: measured wind speed (m/s)

The value of K, S_1 and S_2.

K =0.43 from Table (A-10)

S_1 =0.9 from Table (A-11)

S_2 =0.75 from Table (A-12)

V_O= 1.4 (m/s) from Palestinian code

And the window is sliding ,then:

L = [(1.707× 2) + (2.13×3)] + [(1.707 × 2) + (2.13×3)]

= 19.6 m

Therefore ;

$\dot{V}f$ = (0.43) (19.6) [0.613(0.9 × 0.75 × 1.4)^2] $^{2/3}$

= 5.66 m^3/h=1.57× 10^{-3} m^3/s

from the psychometric chart one can obtain the following moist air properties that correspond to the given inside and outside design condition :

v_o = 0.7889 m^3/kg , h_i = 40.6 kJ/kg , h_o = 13.1 kJ/kg

ρ_o = 1/ v_o = 1.267 kg / m^3

The total heat loss due to infiltration is calculated by equation (2.15) as follows:

Through window

$\dot{Q}_{inf.,g}$ = $\rho_o \dot{V}f$ (h_i - h_o)

= (1.267)(1.57× 10^{-3})(40.6 – 13.1)

= 0.0547kW

= 54.7 W

Through door

$\dot{Q}_{inf.,d}$ = $\frac{\dot{V}f}{vo}$ (h_i - h_o)

$\dot{V}f$ = K × L [0.613 (S_1× S_2× $v_\circ$)^2] $^{2/3}$

L = [(0.8× 2) + (1.6×2)] + [(0.8× 2) + (1.6×2)]

= 9.6 m

Therefore ;

$\dot{V}f$ = (0.43) (9.6) [0.613(0.9 × 0.75 × 1.4)^2]$^{2/3}$

= 2.76× 10^{-3} m^3/s

$\dot{Q}_{inf.,d}$ = $\rho_o \dot{V}f$ (h_i - h_o)

= (1.267)(2.76× 10^{-3})(24 - 14)

0.0 3497 kW = 34.970 W

$\dot{Q}_{inf.,tot}$ =$\dot{Q}_{inf.,g}$+ $\dot{Q}_{inf.}$,d

= 54.7 + 34.970

= 89.67 W

The total heat loss from the chess hall is

$\dot{Q}_{tot}$ = $\dot{Q}_{w,tot}$ +$\dot{Q}_f$ +$\dot{Q}_g$ +$\dot{Q}_d$+$\dot{Q}_{w\ int}$ + $\dot{Q}_{inf.,tot}$

= 872.63 + 606.4 + 465.28 + 43+62.33 + 89.67

= 2139.3W

Heating Load Summary is listed in the following table:

Table (2.7): Heating load for each flat in the building

room No.	Heating Load (kW)	room No.	Heating Load (kW)
1	6.757	12	5.518
2	3.1726	13	5.214
3	3.76	14	1.6
4	4.839	15	2.09
5	4.669	16	3.027
6	2.1393	17	2.861
7	1.2	18	1.83
8	2.89	19	6.7
9	5.62		
10	8.31		
11	3.91		

The total heating load for the building = 76 kW

Chapter Three

Cooling Load

3.1 Cooling Load calculation:

3.2Overview

Cooling load is the rate at which heat energy must be removed from a space in order to maintain a given inside design condition. Figure (2.5) shows the source of cooling load.

The cooling load of a building consists of the following heat gains [1]:

i. Heat gains that are transmitted through shaded building structures such as walls, floors and ceilings and that adjacent to unconditioned space. The heat transmitted in this case is caused by temperature difference that exists on both sides of the structure. This heat gain is calculated by using this equation:

$$Q = UA\,(T_{out} - T_{in}) \quad (3.1)$$

ii. Heat gains due to solar effects which include:
   a. Solar radiation transmitted through the glass into the air conditioned space and absorbed by inside space surfaces and furniture.
   b. Solar radiation absorbed by walls, glass windows, glass doors, and roofs that are exposed to solar radiation.

iii. Sensible and latent heat gains brought into the space as a result of infiltration of air through windows and doors.

iv. Sensible heat produced in the space by lights, appliances, motors and other miscellaneous heat gains.

v. Latent heat produced from cooking, hot baths, or any other moisture producing equipment.

vi. Sensible and latent heat gains due to occupants.

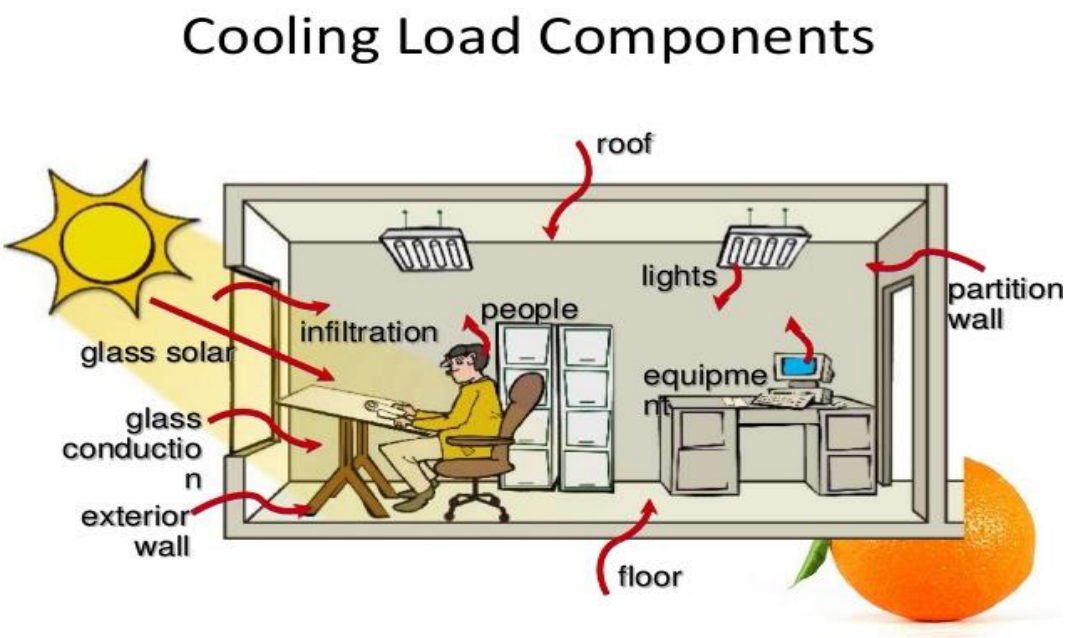

Figure (3.1): Source of cooling load

3.3 Cooling Load Calculations:

Direct and diffused solar radiation that absorbed by walls and roofs result in raising the temperature of these surfaces. Amount of radiation absorbed by walls and roofs depends upon time of the day, building orientation, types of wall construction and presence of shading.

The heat transfer rate through sunlit walls or sunlit roofs is calculated from the following equation:

$Q = UA\,(CLTD)_{corr.}$ (3.2)

Where:

$(CLTD)_{corr.}$: corrected cooling load temperature difference, ˚C

$(CLTD)_{corr.} = (CLTD + LM)\,k + (25.5 - T_{in}) + (T_{o,m} - 29.4)\,f$ (3.3)

Where:

CLTD: cooling load temperature difference, ˚C
LM: latitude correction factor.
k: color adjustment factor.
T_{in}: inside comfort design temperature, ˚C
f: attic or roof fan factor.
$T_{o,m}$: outdoor mean temperature, ˚C

$T_{o,m} = (T_{max} - T_{min}) /2$ (3.4)

Where:

T_{max}: maximum average daily temperature, ˚C
T_{min}: minimum average daily temperature, ˚C

T_{max} = 36.1 ˚C and T_{min} = 13.7 ˚C are obtained from Palestinian Code.

Applying these values in equation (3.4) to obtain the outdoor mean temperature

$T_{o,m}$ = 24.9 ˚C.

3.4 Sample Calculation:

Calculation the heat gain from the Bedroom in the last floor as a sample :

Heat gain through sunlit roof (Q_{Roof}):

CLTD = 14 ˚C from Table(A-1)

LM = 0.5 from Table (A-2)

k = 1 for permanently dark colored roofs.

f = 1 there is no attic or roof fan.

$(CLTD)_{corr.} = (14 + 0.5)\ 1 + (25.5 - 24) + (24.9 - 29.4)\ 1$

$= 11.5˚C$

$\dot{Q}_{Roof} = (U\ A)\ (CLTD)_{corr}$ (3.5)

$\dot{Q}_{Roof} = (0.849 \times 77\ )(\ 11.5)$

$= 751.78W$

$= 0.75178\ kW$

Heat gain through sunlit walls (Q_{Wall}):

CLTD at 14:00 o'clock … from Table(A-3)

N = 12

E = 0.0

k = 0.83 for permanent medium color walls.

$A_n = 10.7 \times 3.45 = 36.9 m^2$

$(CLTD)_{corr.,\ n} = (12+0.0)\ 0.83 + (25.5-24) + (24.9-29.4) \times 1$

$= 16.96\ ^{\circ}C$

$\dot{Q}_{Wall} = \dot{Q}_E = 0.7880 \times 36.9 \times 16.9$

$= 491.4\ W$

$= 0.4914\ kW$

Heat gain through unconditioned walls ($Q_{un.}$):

From south wall

$Q_{un.,S} = U\ A\ \Delta T$

$= 2.642 \times 22 \times 6$

$Q_{un} = 0.3487\ kW$

Heat gain due to glass (Q_{Glass}):

Solar radiation which falls on glass has three component which are:

1- Transmitted component: it represents the largest component, which is transmitted directly into the interior of the building or the space. This component represents about 42% to 87% of incident solar radiation, depending on the glass transmissibility value.

2- Absorbed component: this component is absorbed by the glass itself and raises its temperature. About 5 to 50% of solar radiation it absorbed by the glass, depending on the absorptive value of the glass.

3- Reflected component: this component is reflected by the glass to the outside of the building. About 8% of the solar energy is reflected back by the glass.

The amount of solar radiation depends upon the following factors:

1- Type of glass (single, double or insulation glass) and availability of inside shading.
2- Hour of the day, day of the month, and month of the year.
3- Orientation of glass area. (North, northeast, east orientation, etc).
4- Solar radiation intensity and solar incident angle.
5- Latitude angle of the location.

The maximum cooling load due to the glass window $Q_{Glass,}$ consists of transmitted ($Q_{tr.}$) and convected ($Q_{conv.}$) cooling loads as follows:

$$Q_{Glass} = Q_{tr.} + Q_{conv.} \quad (3.6)$$

Where:

$Q_{tr.}$: transmission heat gain, W

$Q_{conv.}$: convection heat gain, W

SHC : Solar heat gain factor : this factor represents the amount of solar energy that would be received by floor, furniture and the inside walls of the room and can be extracted from table (A-5).

SC : Shading coefficient : this factor accounts for different shading effects of the glass wall or window and can be extracted from table (A-6) for single and double glass without interior shading .

CLF : Cooling load factor : this represent the effects of the internal walls, floor, and furniture on the instantaneous cooling load, and can be extracted from table (A-7) for glass without interior shading or from table (A-8) for glass with interior shading.

The transmitted cooling load is calculated as follows:

$$Q_{tr.} = A\ (SHG)\ (SC)\ (CLF) \quad (3.7)$$

SHG in W/m^2 … from Table (A-5)

N = 126

E = 678

SC = 0.4 for nourth and east wall… reflective double .

CLF at 14:00 o'clock …

N = 0.86

E = 0.22

$Q_{tr.\,N} = 3.9 \times 126 \times 0.4 \times 0.86$

$= 169.04$ W

$Q_{tr.E} = 2(1.5 \times 0.8) \times 678 \times 0.4 \times 0.22$

$= 143.19$ W

$Q_{tr} = Q_{tr.\,N} + Q_{tr.E}$

$= 169.04 + 143.19$

$= 0.31223$ kW

$Q_{conv.} = UA\,(CLTD)_{corr.}$ (3.8)

Where:

U: Over all heat transfer coefficient of glass ($W/m^2.K$).

A: Out windows Area of heat conduction. (m^2).

$(CLTD)_{corr.}$: is calculated as the same of walls and roofs and the CLTD value for

glass is obtained from table (c)

CLTD = 7 ˚C for two side at 14:00 o'clock

k = 1 for glass

f = 1 for glass

$Q_{conv.\,E} = 34.56$ W

Q_{Glass} = 312.72 + 34.56

= 347.28 W

= 0.3473 kW

Heat gain due to lights ($\dot{Q}_{Lt.}$):

Heat gains due to lights are sensible loads and is calculated by the following equation:

$\dot{Q}_{Lt.}$ = light intensity × A × $(CLF)_{Lt.}$ (3.9)

Where:

light intensity = 10-30 W/m^2 for apartment, so we will take 30W/m^2

A: floor area = 77 m^2

$(CLF)_{Lt.}$: cooling load factor for lights.

$(CLF)_{Lt.}$ = 0.85 …

$Q_{Lt.}$ = 30 × 77 × 0.85

= 1963.5W

= 1.9635 kW

Heat gain due to infiltration (Q_f):

As the same way in heating load

$\dot{Q}_{inf.,g} = \frac{\dot{V}f}{vo}(h_o - h_i)$ (3.10)

Where:

hi: Inside enthalpy of infiltrated air in(kJ/kg)

ho: Outside enthalpy of infiltrated air in (kJ/kg)

$\dot{V}f$: The volumetric flow rate of infiltrated air in (m^3/s)

vo : Specifics volume in(m^3/kg)

$\dot{V}f$ = K × L [0.613 $(S_1 \times S_2 \times V_o)^2$]$^{2/3}$ (3.11)

Where :

K = the infiltration air coefficient.

L: the crack length in meter.

S_1: factor that depends on the topography of the location of the building

S_2: coefficient that depends on the height of the building.

V_o: measured wind speed (m/s)

The value of K, S_1 and S_2:

K = 0.43

S_1 = 0.9

S_2 = 0.75

V_o= 1.4 (m/s) from Palestinian code

And the window is sliding as figure (2.3), then :

L = [(2.4× 2) + (2.13×3)] + 2 [(0.8× 2) + (2.13×3)]

= 27.17 m

$\dot{V}f$ = (0.43) (27.17) [0.613(0.9 × 0.75 × 1.4)^2] $^{2/3}$

= 7.812m^3/h

=2.17 × 10^{-3} m^3/s

From the psychometric chart one can obtain the following moist air properties that correspond to the given inside and outside design condition :

v_o = 0.877 m^3/kg , h_i = 69.06 kJ/kg , h_o = 47.79kJ/kg

ρ_o = 1/ v_o = 1.1274 kg / m^3

The total heat loss due to infiltration is calculated by equation (3.10) as follows:

Through window

$\dot{Q}_{inf.,g}$ = $\rho_o \dot{V}f$ (h_i - h_o)

= (1.1274)(2.17× 10^{-3})(69.06 – 47.79)

= 52.04 W

Through door

$\dot{Q}_{inf.,d} = \frac{\dot{V}f}{vo}(h_i - h_o)$

$\dot{V}f = K \times L\ [0.613\ (S_1 \times S_2 \times v_\circ)^2\ ]^{2/3}$

L = [(0.8× 2) + (1.2×2)] + [(0.8× 2) + (1.2×2)]

= 8m

Therefore ;

$\dot{V}f = (0.43)\ (8)\ [0.613(\ 0.9 \times 0.75 \times 1.4)^2\ ]^{2/3}$

$= 6.391 \times 10^{-4}\ m^3/s$

$\dot{Q}_{inf.,d} = \rho_o \dot{V}f\ (h_i - h_o)$

$= (1.1274)(\ 6.391 \times 10^{-4}\ )(\ 69.06 – 47.79)$

= 15.32 W

$\dot{Q}_{inf.,tot} = \dot{Q}_{inf.,g} + \dot{Q}_{inf.,d}$

= 0.0674 kW

Heat gain due to occupants ($Q_{oc.}$):

Sensible and latent heat gains from occupants must be removed from the conditioned space. The heat gain due to occupants is the following:

$Q_{oc.} = Q_{sensible} + Q_{latent}$ (3.12)

$Q_{sensible}$ = heat gain sensible × No. of people × $(CLF)_{oc.}$ (3.13)

Where: $(CLF)_{oc.}$: cooling load factor due to occupants.

heat gain sensible = 70 very light work …

No. of people = 30

$(CLF)_{oc.}$ = 0.89 at 9 hours after each entry into space

$Q_{sensible} = 70 \times 30 \times 0.89$

= 1869 W

Q_{latent} = heat gain latent × No. of people (3.14)

heat gain latent = 44… very light work .

$Q_{latent} = 44 \times 30$

$= 1320$ W

$Q_{oc.} = 1869 + 1320$

$= 3189$ W

$= 3.189$ kW

Heat gain due to ventilation ($Q_{vn.}$):

Mechanical ventilation is required for places in which the inside air is polluted due to activities that place in these spaces as factories, restaurants, closed parking areas, etc. The amount of outside fresh air recommended for mechanical ventilation for different applications. The sensible and total cooling loads required to cool the ventilated air to the inside room temperature is calculating by the following equation:

$\dot{Q}_{vn.} = \dot{m} \times Cp_{air} \times (T_{out} - T_{in})$ (3.15)

Where:

$\dot{m}$: mass flow rate of ventilation air, kg/s

Cp_{air}: specific heat of air = 1.005 kJ/kg .k

$$\dot{m} = \frac{\text{rate of ventilation air}}{\text{vo}} \quad (3.16)$$

rate of ventilation air = $A_{room} \times$ requirement outside ventilation air (3.17)

$A_{room} = 77\ m^2$

requirement outside ventilation air = 10 $L/s/m^2$.

rate of ventilation air = 77×10

$= 770$ L/s

$= 0.77\ m^3/s$

$v_o = 0.879 m^3/kg$

$\dot{m} = 0.77/0.879$

$= 0.8759$ kg/s

$Q_{vn.} = 0.8759 \times 1.005 \times (30 - 24)$

$= 5.28$ W

$= 0.00528$ kW

The total heat loss from Lecture Hall is:

$Q_{Tot} = Q_{Roof} + Q_{Wall} + Q_{un.} + Q_{Glass} + Q_{Lt} + Q_{inf,tot} + Q_{oc.} + Q_{vn.}$ (3.18)

$= 0.75178 + 0.4914 + 0.3487 + 0.3473 + 1.9635 + 0.0674 + 3.189 + 0.00528$

$= 7.1644$ kW

Cooling Load Summary is listed in the following table:

Table (3.1): Cooling load for each flat in the building

room No.	Cooling Load (kW)	room No.	Cooling Load (kW)
1	8.784	12	7.1644
2	4.124	13	6.7782
3	4.888	14	2.08
4	6.29	15	2.717
5	6.069	16	3.9351
6	2.781	17	3.7193
7	1.56	18	2.379
8	3.757	19	8.71
9	7.306		
10	10.803		
11	5.083		

The total cooling load for the building = 98.9 kW

Chapter four

Plumping System

4.1 Introduction

Plumping consist of two things which is water supply system and drainage distribution system.Plumbing design is the system of pipes drains fittings, valves, valve assemblies, and devices installed in a building for the distribution of water for drinking and washing, and the removal of waterborne wastes, and the skilled trade of working with pipes, tubing and plumbing fixtures in such systems.

Plumbing fixtures are exchangeable devices using water that can be connected to building's plumbing system, Some examples of fixtures include water closets (also known as toilets), urinals, bidets, showers, bathtubs, utility and kitchen sinks, lavatory.

4.2 water supply system

Water supply system, there are two basic types of water distribution systems for building:

1. Up feed distribution system.
2. Down feed distribution system.

this project will be use the down feed distribution system for cold water and hot water, the supply of water for the residential building is received from the municipal.

Usually the water pressure at the supply point of the municipality be between (35-50) psi, this water enters the well of the residential building and then by using pumps which pumping the water to the building.

Minimum pressure required in the top floor is usually (8) psi from Appendix Table (L) for flush tank and maximum pressure on the lowest floor should not exceed (50) psi , otherwise pressure reducing valves are used to reduce the pressure, pipe diameters change in the internal network, the pressure inside the tube does not change ,which is changing the flow rate.

the main pressure is 50 psi determined , total equivalent length 165 ft.

4.3 Drainage system

The main objective of drainage system is to carry the waste water from the fixture unit to manhole and from the manhole to the septic tank or to the municipal sewage system . The provision of drainage systems:

- Sanitary drainage.
- Storm drainage.

Some Parts of drainage system

1-House drain: The lowest piping in a house drainage system, this pipe receives the discharge from soil, waste, and other drainage pipes, and then carries such discharge to the house sewer .The house drain ends just outside the front or foundation wall of the building, and operates by gravity.

2-Soil stack and pipe: Any line of pipe which carries the discharge of water closets. The term "stack" refers to the vertical runs of such piping.

3-Waste stack and pipe: All pipe receiving the discharge of fixtures other than water closets. An indirect waste pipe does not connect directly with either the house drain or the soil or the waste stack, but usually ends over and above the overflow rim of fixture that is water-supplied, trapped, and vented.

4-Sub-house drain: Any portion of the drainage system which cannot drain by gravity but which still handles the disposal of waste sewage.

5-Fixture: Any receptacle intended to receive or discharge water or water-carried waste into the drainage system.

6- main: Any system of horizontal, vertical, or continuous piping to which fixtures are connected either directly or through the use of branches.

7-Branch: That part of the plumbing system which extends from the main to a fixture.

8-Leader: Any vertical line of piping which receives and carries rain water.

9-Fitting: Any one of a number of devices used to connect pieces of pipe or change the direction of pipe.

4.4 Water supply system calculation

Fixture unit load calculations

In this section the total amount of water that required for the building is to be calculated.

By using the water supply fixture unit technique, This technique used because there are a number of fixture units and that's make this technique more accurate.

Building consist two floors with two a apartment to each floor by using down feed system on sample.

TABLE(4.1) :WSFU for the Bathroom.

Fixture unit	NO.of Unit	WSFU	Total no. of WSFU for cold water	Total no. of WSFU for hot water	Total no. of WSFU for hot&cold water
Lavatory(private)	6	1	0.75	0.75	6
Water closet flush tank (private)	6	3	3	…….	18
.....	**.....**	**.....**	Total = 3.75	Total = 0.75	Total = 24

TABLE (4.2) : WSFU for the bathroom in the ground floor.

Fixture unit	NO.of Unit	WSFU	Total no. of WSFU for cold water	Total no. of WSFU for hot water	Total no. of WSFU for hot&cold water
Lavatory(private)	6	1	4.5	4.5	6
Water closet flush tank (private)	6	3	18	…….	18
.....	**.....**	**.....**	Total = 22.5	Total = 4.5	Total = 24

TABLE (4.3) :WSFU for bathroom in the first floor.

Fixture unit	NO.of Unit	WSFU	Total no. of WSFU for cold water	Total no. of WSFU for hot water	Total no. of WSFU for hot&cold water
Lavatory(private)	6	1	3	3	6
Water closet flush tank (private)	6	3	18	…….	18
			Total = 21	Total = 3	Total = 24

TABLE (4.4) : The WSFU and gpm all floors.

No.of floor	Total no. of WSFU for cold water	Total no. of WSFU for hot water	Total no. of WSFU for cold& hot water	Total no. of gpm for cold water	Total no. of gpm for hot water	Total no. of gpm for hot & cold water
Ground floor	22.5	4.5	24	15.5	3.875	16.4
First floor	21	3	24	14.6	2.75	16.4
…….	…….	…….	…….	Total = 30.1 gpm	Total = 6.625 gpm	Total = 32.8 gpm

4.5 Pipe Size Calculations

Using the down feed distribution system where the water serve the building by the effect of the gravity. In this system the static pressure will be the main pressure, and the equation of the flow will be:

$$Static\ pressure = Friction\ head\ loss + Flow\ pressure \tag{6.1}$$

The calculations were made for all risers at the Building .

$$\text{Static pressure} = 24 \times \frac{0.433}{0.33} = 11.21 \text{ psi}$$

$$11.21 = \text{Friction head loss} + 8$$

Then: $\text{Friction head loss} = 3.21 \text{ psi}$

The equivalent length calculation:

$$\text{Total equivalent length} = \frac{8.1 \times 1.5}{0.33} = 36.8 \text{ ft.}$$

$$Uniform\,design\ friction\,loss = \frac{Available\,headloss}{Equivalent\,length} \tag{6.2}$$

$$\text{Uniform design frictionless} = \frac{3.21}{36.8} = 0.8 \text{ psi/100 ft .}$$

Table (4.5) : Pipe sizing risers (water supply system) for All floors .

Floor	**Riser**	**Cold & Hot water diameter (in)**	**Velocity (fps)**
Ground	1	1.25	5
First	1	1.25	5

4.6 Design drainage system

The wastewater system should be designed, constructed, and maintained to guard against fouling, deposit of solids, and clogging. And the foul air in the waste water system should be exhausted to the outside, through vent pipes.

The calculations were made by using the table of drainage fixture unit values for various plumbing fixture units to find the amount of drainage fixture unit. Then we use the table of horizontal fixture branch and stuck to determine the diameters of the pipes.

Table (4.6) : drainage fixture unit (dfu) table for the first stack.

Floor	Plumbing Fixture type	Number of fixtures	dfu per fixture	Total dfu
Ground floor	Water closet	3	4	12
	Lavatory	3	1	3
First floor	Water closet	3	4	12
	Lavatory	3	1	3
Total				30

Table (4.7) : drainage fixture unit (dfu) table for the second stack.

Floor	Plumbing Fixture type	Number of fixtures	dfu per fixture	Total dfu
Ground floor	Water closet	3	4	12
	Lavatory	3	1	3
First floor	Water closet	3	4	12
	Lavatory	3	1	3
Total				30

For the two stacks the diameter of them are selected to be 3” along them .

4.7 Manhole calculation:

The depth of the first manhole is 40 cm, the calculation of the second manhole done according to the first manhole and so on. The calculations are done by using these equations:

- Depth: (M2 = M1 + (Slope × Distance) + 5 + Level Difference) in cm
- Top level: Manholes face level on the ground
- (Invert level = Top level - Depth) in m
- Outlet level = - (Depth - 0.05) in m

The figure below shows the details of the manholes:

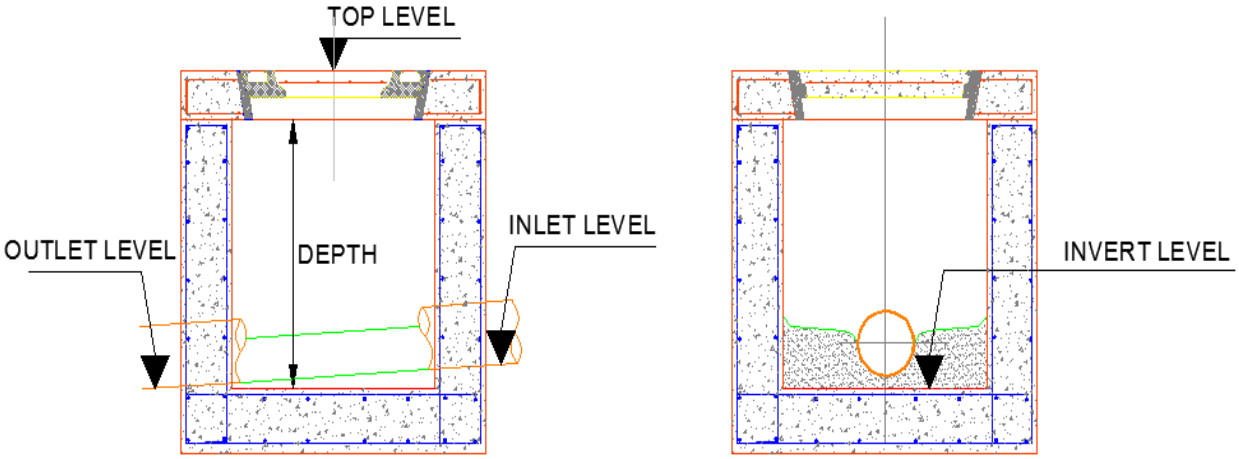

Figure (4.1): Manholes details

The result calculation of the manholes is listed in the table below:

Table (4.8) : Calculation of the manholes

MANHOLE #	MANHOLE Diameter CM	Top Level M	In Invert1 M	Out Invert M
01	60	0.00	−0.40	−0.42
02	60	0.00	−0.50	−0.52
03	60	0.00	−0.60	−0.62
04	60	0.00	−0.71	−0.73
05	60	0.00	−0.80	−0.82
06	60	0.00	−0.93	−0.95
07	60	0.00	−1	−1.2
08	60	0.00	−1.3	−1.5
09	60	0.00	−1.6	−1.8
10	60	0.00	−1.9	−2.1
11	80	0.00	−2.5	−2.8

Chapter Five

Fire Fighting System

5.1 Introduction

A firefighting system is probably the most important of the building service, as its aim is to protect human life and property strictly in that order, Fire is a chemical reaction involves the rapid oxidation of the combustible materials, also we can divide the causes of fire by four main parts called the fire tetrahedron and the four ignition components are:

1) Fuel (combustible substances).
2) Air (oxygen)
3) Heat (source of ignition)
4) Chain reaction

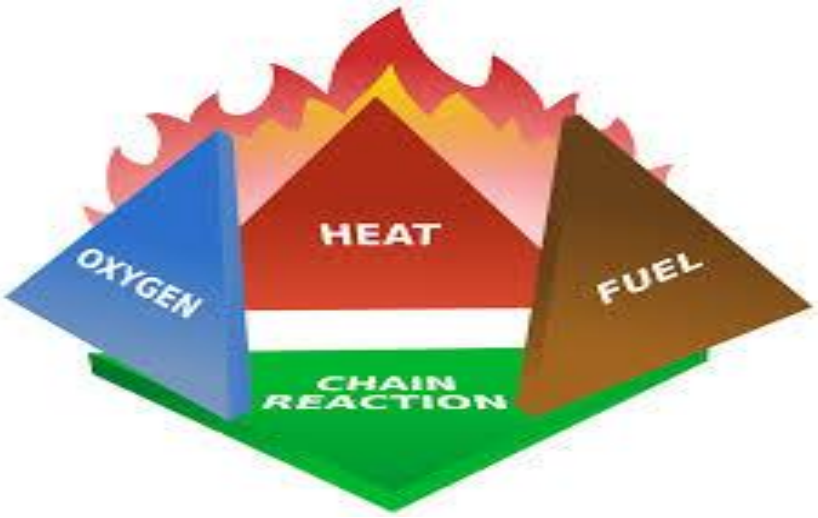

Figure (5.1): Fire tetrahedron

The following is a description for this component:

Fuel or combustible substances are the materials flammable to ignition consist of hard, liquid and Gaseous materials such as woods, gasoline and hydrogen.

Air (oxygen) the percentage of the oxygen in natural air is 21% and the percentage which prevents a fire production is to keep more than 16%.

Heat it's the main reason to producing a vapor from materials to occurrence of ignition such as heat produces from electrical sources, smoking etc.

Chain chemical reaction, the fire is continues as long as the previous three elements are present correct percentages, and the result of these elements of effective chemicals known as free radicals.

Fire work is divided into three sections for engineer:

1) Architect engineer: It is specialized in acting fire safety.

2) Electrical engineer: it is specialized in fire alarm.

3) Mechanical engineer: it is specialized in firefighting.

Also in design for firefighting system the main reference is (NFPA) code, national fire protection association or (FOC) fire offices committee.

5.2 Classification of firefighting systems

Firefighting systems are classified to:

1) Water system.

2) Gas system.

3) Foam system.

5.2.1 Water firefighting system

It's the system which mainly depend in water to protect from the fire , is the most common use in buildings and factories, also water system can be classified to manual and automatic systems as following:

1) Manual system

Manual system consists of two types of fire system divided to:

a. Fire hose cabinet.

A fire hose cabinet is a high-pressure hose that carries water to a fire to extinguish it. Indoors, it can permanently attach to a building's standpipe or plumbing system, most modern hoses use a synthetic fiber like polyester or nylon filament used in fire hoses that provides additional strength, the usual working pressure of a fire hose can vary between 4 and 12 bars that vary according to the type of fire hose.

b. Fire hydrant.

A fire hydrant is an active fire protection measure, and a source of water provided in most urban, suburban and rural areas with municipal water service to enable firefighters to tap into the municipal water supply to assist in extinguishing a fire, the working pressure is 350 kpa (3.5 bars).

All of design factors for manual water system can be determined using NFPA 14 code.

2) Automatic system.

The water automatic system is represented by a sprinklers system which deals with four types as following:

a. Wet pipe sprinkler system.

A sprinkler system employing automatic sprinklers attached to a piping system containing water and connected to a water supply so that water discharges immediately from sprinklers opened by heat from a fire.

b. Dry pipe sprinkler system.

A sprinkler system employing automatic sprinklers attached to a piping system containing air or nitrogen under pressure, the release of which permits the water pressure to open valve and the water then flow into the piping system and out to the opened sprinklers.

c. Pre-action sprinkler system.

A sprinkler system employing automatic sprinklers attached to a piping system containing air or nitrogen under pressure, with a supplemental detection system (heat, flam and smoke) installed in the same areas as sprinklers.

d. Deluge sprinkler system.

A sprinkler system employing automatic sprinklers attached to a piping system containing water and connected to a water supply through a valve that is opened by the operation of a detection system installed in the same area as the sprinklers, when this valve opens water flow into the piping system and discharges from all sprinklers.

All of design factors for automatic water system can be determined using NFPA 13 code.

5.2.2 Gas firefighting system

It's the system which mainly depends in several gases to protect from the fire; gas firefighting system can also be classified to:

1) Manual system

Fire extinguishers

is an active fire protection device used to extinguish or control small fires, often in emergency situations , fire extinguisher consists of a hand-held cylindrical pressure vessel containing an agent which can be discharged to extinguish a fire.

In general fire extinguishers can be water, co_2, foam, wet chemical and dry powder extinguisher.

All of design factor for manual gas system can be determined using NFPA 10 code.

2) Automatic system

Clean agent gases fire extinguisher.

This group of gases are speed in suppressing fires, reducing damages, extinguish a fire quickly and effectively, no ozone depletion, economic, allowing visibility and doesn't require costly clean-up.

These gases are FM-200, NAF 125 (HFC 125), ARGON and CO_2.

All of design factors for automatic gas system can be determined using NFPA 12 code.

5.2.3 Foam firefighting system

Is foam used for fire suppression, its role is to cool the fire and to coat the fuel, preventing its contact with oxygen, resulting in suppression of the combustion.

Foam system can be manual such as foam extinguisher or automatic such foam- water sprinkler system.

All of design factors for automatic and manual foam system can be determined using NFPA 16 code.

5.3 System selection and design

For determination and selection of fire protection system within the establishment and buildings with different objectives and the importance of having a firefighting system, the selection occurs by referring to know the hazard level in the building in order to select the appropriate system.

5.3.1 Fire hose cabinet

Fire hose reels are provided for use by occupants as a 'first attack' firefighting measure but may in some instances be used by firefighters . When stowing a fire hose reel, it is important to first attach the nozzle end to the hose reel valve, then close the hose reel valve, then open the nozzle to relieve any pressure in the wound hose, then close the nozzle. When the hose reel is next used, the operator will be forced to turn on the isolating valve, thus charging the hose reel with pressurized water supply, before being able to drag the hose to the fire. A potential danger exists if the operator reaches the fire and finds no water is available because the hose reel valve is still closed.

Figure (5.2) : Fire cabinet and hose reel

5.3.2 Pipe size calculation

The fire hose reel system is to be used, so the pipe size for this system will be calculated as follows:

The minimum flow rate for single cabinet = 23 (L/min) .

Then:

$$\text{The total flow rate} = \text{min. flow rate} \times \text{No. of cabinet}$$

$$\text{The total flow rate} = 23 \times 8 = 184 \text{ l/min}$$

TABLE (5.1): Pipe schedule - standpipes and supply piping

Total Accumulated Flow		Total Distance of Piping from Farthest Outlet		
L/min	**gpm**	**<15.2 m (<50 ft)**	**15.2–30.5 m (50–100 ft)**	**>30.5 m (>100 ft)**
379	100	2	2½	3
382–1893	101–500	4	4	6
1896–2839	501–750	5	5	6
2843–4731	751–1250	6	6	6
4735	1251 and over	8	8	8

Note: For SI units, 3.785 L/min = 1 gpm; 0.3048 m = 1 ft.

Then the Table 5.1 is to be used to calculate the pipe size by follow the next procedure. First, the total flow rate is determined which is 184 l/min for our calculation sample. Then the total distance of piping from farthest outlet is to be chose. Finally, the intersection between the two values in Table 5.1 will give the size of pipe supply which is equal to 2".

Then to determine the outlet pipe size from pipe supply to hose connection the class of the building must be chose from the NFPA. For this building the class is class II. A class II referred to NFPA means: standpipe system provides (1½-in.) hose stations to supply water for use primarily by the building occupants or by the fire department during initial response. According to the NFPA 14 the pressure required for the (1½-in.) pipes is 6.9 bar.

5.4 Firefighting pumps

A continuous water and pumping station supply should always be available and ready to fight fire, the following three pumps should be connected to firefighting network.

Pumping stations should include:

1. Electrical firefighting pump.

2. Stand-by Diesel Firefighting Pump.(No need if an extra electric pump is connected to an electric generator).

Diesel pump works if:

- The electrical pump is out of service, or if there is a lack of electricity.
- The electrical pump is working but can't satisfy system water requirements.

3. Jockey Pump:work to make up the system pressure in case of leakage or during the first seconds of fire.

Pumps are selected to supply the system demands on the basis of three key points relative to their rated flow and rated pressure ;most fire pumps are sized to exceed its duty point requirement.

5.4.1Types of pumps

Horizontal split case pumps

This is also called a double suction fire pump because the water pathways direct water to both sides of the impeller. It is also the most common fire pump in the market partly because of the ratings available in this style of pump 250 GPM through 5000 GPM.

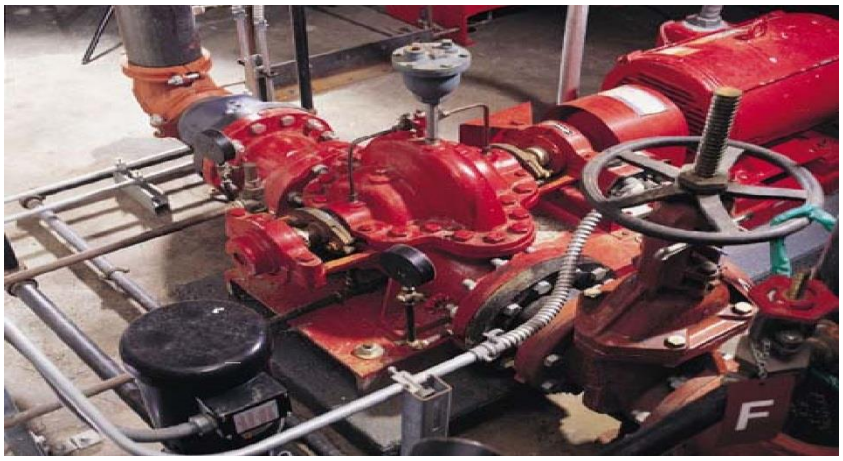

Figure (5.3): Horizontal split case pump

Inline fire pumps

These pumps have expanded in use in the last five years for several reasons, space savings, Increase in ratings allowable by NFPA 20 from max of 499 GPM, and then to 750 GPM, to today which is unlimited rating. The largest currently available is 1500 GPM, Cost of installation –these are typically less expensive to install because there is no base plate that requires grouting.

Figure(4.4): Inline fire pump

End suction pumps

End suction fire pumps not widely used mostly because they are limited in size per code ,They are also slightly more expensive than in line pumps ,The one pump application where it is used is small diesel driven applications 500 GPM or l less.

Figure (5.5): End Suction pump

Vertical turbine pumps

These are used for vertical turbine pumps and used for water supplies that are below the suction flange of a fire pump; NFPA 20 states that you have to have a positive suction pressure to a fire pump.

Figure (5.6) : Vertical turbine pump

5.4.2 Flow rate calculations

There are two main factors in GPM calculations:

1. Area calculation
2. Standpipe calculation

The standpipe calculation is the selected calculation, so according to NFPA 14 states that the GPM required for the first standpipe is 500 GPM

Each additional standpipe requires 250 GPM with a maximum GPM of 1000 GPM

If a building has 2 standpipes the pump GPM would be 750 GPM, 500 GPM for the first and 250 for the second.

If a building has 3standpipes the pump GPM would be 1000 GPM, 500 GPM, 250 for the second, and 250 for the third.

Any building with more standpipes would be 1000 GPM as that is the maximum allowable by code.

5.4.3 Head estimation

With 23.2 meter height of the buildings there are 3.3 bars, adding 4.5 bars for cabinet pressure and 1 bar for loss in fittings, so total head equal 8.8 bars.

5.4.4 Pump selection

Total flow rate 250 GPM equal to 40 m^3/h and amount of head 8 bars. The pump installed must satisfy the required flow rate and head, according to the special software for GRUNDFOS Company the inline pump choosen.

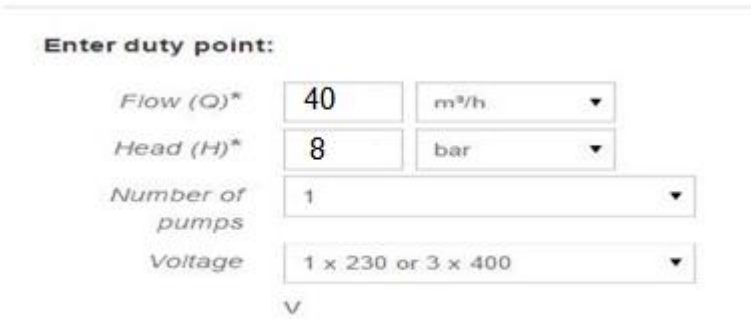

Figure (5.7): Pump details.

Pump type: TP 100-960/2 A-F-ADBUE

Pump characteristic curves:

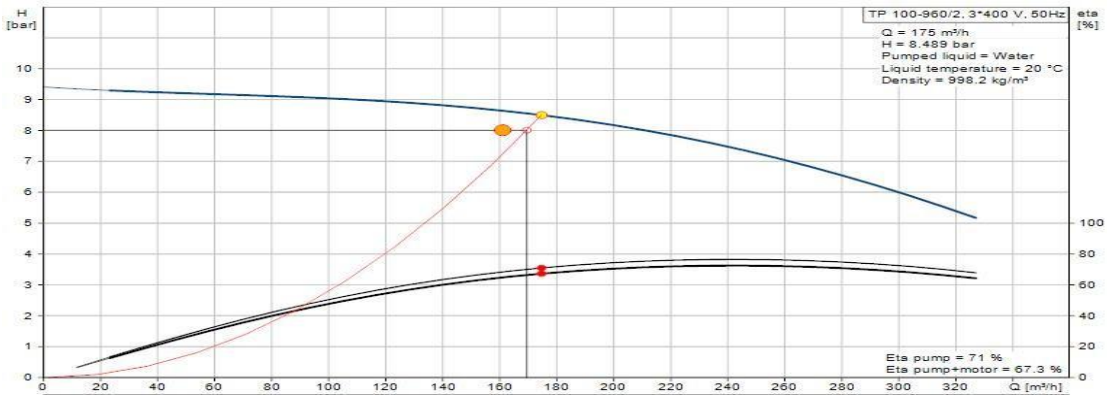

Figure (5.8): Pump characteristic curve.

Figure (5.9): Pump photo.

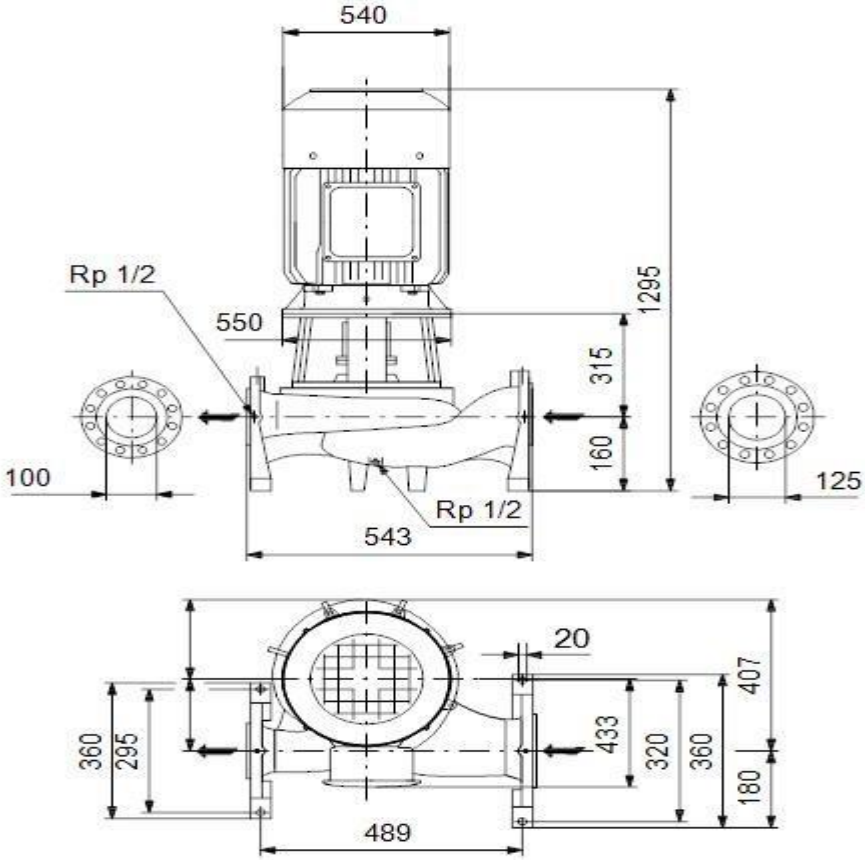

Figure (5.10): Pump dimensional drawing**.**

Chapter six

Variable Refrigerant Flow System

6.1 Variable Refrigerant Flow System

6.1.1 Overview

The primary function of all air-conditioning systems is to provide thermal comfort for building occupants. There are a wide range of air conditioning systems available, starting from the basic window-fitted units to the small split systems, to the medium scale package units, to the large chilled water systems, and currently to the variable refrigerant flow (VRF) systems.

Variable refrigerant flow (VRF) is an air conditioning system configuration where there is one outdoor condensing unit and multiple indoor units. The term variable refrigerant flow refers to the ability of the system to control the amount of refrigerant flowing to the multiple evaporators (indoor units), enabling the use of many evaporators of differing capacities and configurations connected to a single condensing unit. The arrangement provides an individualized comfort control, and simultaneous heating and cooling in different zones.

Currently widely applied in large buildings especially in Japan and Europe, these systems are just starting to be introduced in the U.S. The VRF technology/system was developed and designed by Daikin Industries, Japan who named and protected the term variable refrigerant volume (VRV) system so other manufacturers use the term VRF "variable refrigerant flow". In essence both are same.

6.1.2 Variable refrigerant flow description

VRF systems are similar to the multi-split systems which connect one outdoor section to several evaporators. VRF systems continually adjust the flow of refrigerant to each indoor evaporator. The control is achieved by continually varying the flow of refrigerant through a pulse modulating valve (PMV) whose opening is determined by

the microprocessor receiving information from the thermistor sensors in each indoor unit. The indoor units are linked by a control wire to the outdoor unit which responds to the demand from the indoor units by varying its compressor speed to match the total cooling and/or heating requirements.

VRF systems promise a more energy-efficient strategy (estimates range from 11% to 17% less energy compared to conventional units) at a somewhat higher cost.

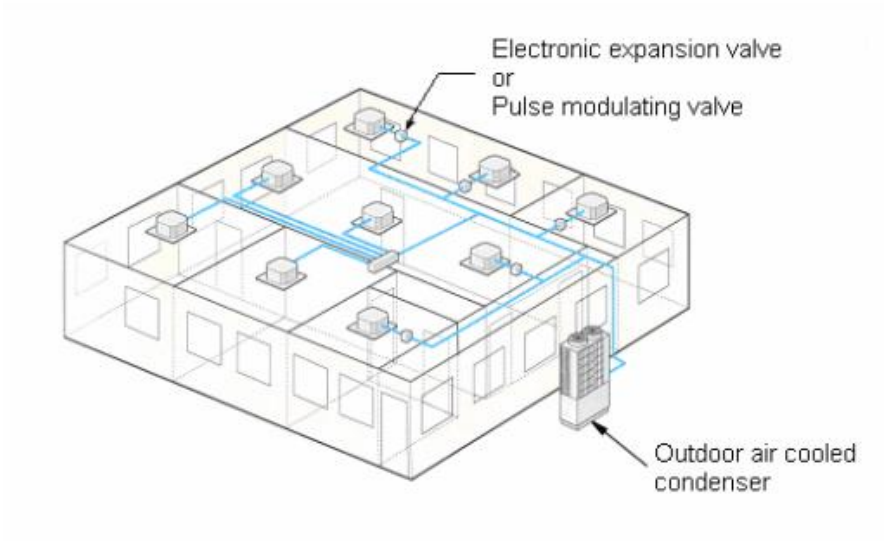

Figure (6.1): VRF System with multiple indoor evaporate units

The modern VRF technology uses an inverter-driven scroll compressor and permits as many as 48 or more indoor units to operate from one outdoor unit (varies from manufacturer to manufacturer). The inverter scroll compressors are capable of changing the speed to follow the variations in the total cooling/heating load as determined by the suction gas pressure measured on the condensing unit. The capacity control range can be as low as 6% to 100%.

Refrigerant piping runs of more than 200 ft are possible, and outdoor units are available in sizes up to 240,000 Btu/ h (60478.98 kW).

A schematic VRF arrangement is indicated below:

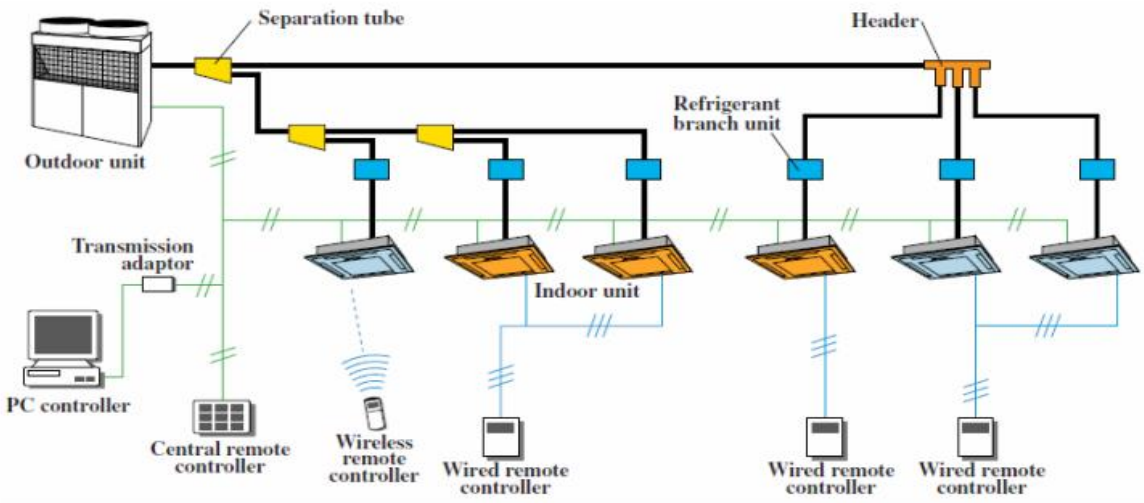

Figure (6.2): A schematic VRF arrangement

VRF systems are engineered systems and use complex refrigerant and oil control circuitry. The refrigerant pipe-work uses a number of separation tubes and/or headers (refer schematic figure above).

A separation tube has 2 branches whereas a header has more than 2 branches. Either of the separation tube or header, or both, can be used for branches. However, the separation tube is never provided after the header because of balancing issues.

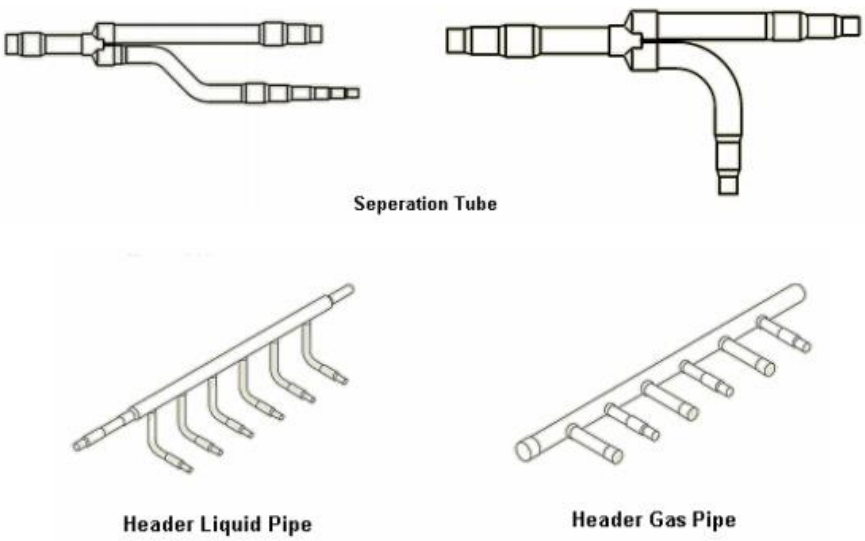

Figure (6.3): Separation and header tubes

6.1.3 Types of VRF

VRV/VRF systems can be used for cooling only, heat pumping or heat recovery. On heat pump models there are two basic types of VRF system: heat pump systems and energy recovery.

<u>VRF heat pump systems:</u>

VRF heat pump systems permit heating or cooling in all of the indoor units but not operate simultaneous heating and cooling. When the indoor units are in the cooling mode they act as evaporators, when they are in the heating mode they act as condensers. These are also known as two-pipe systems.

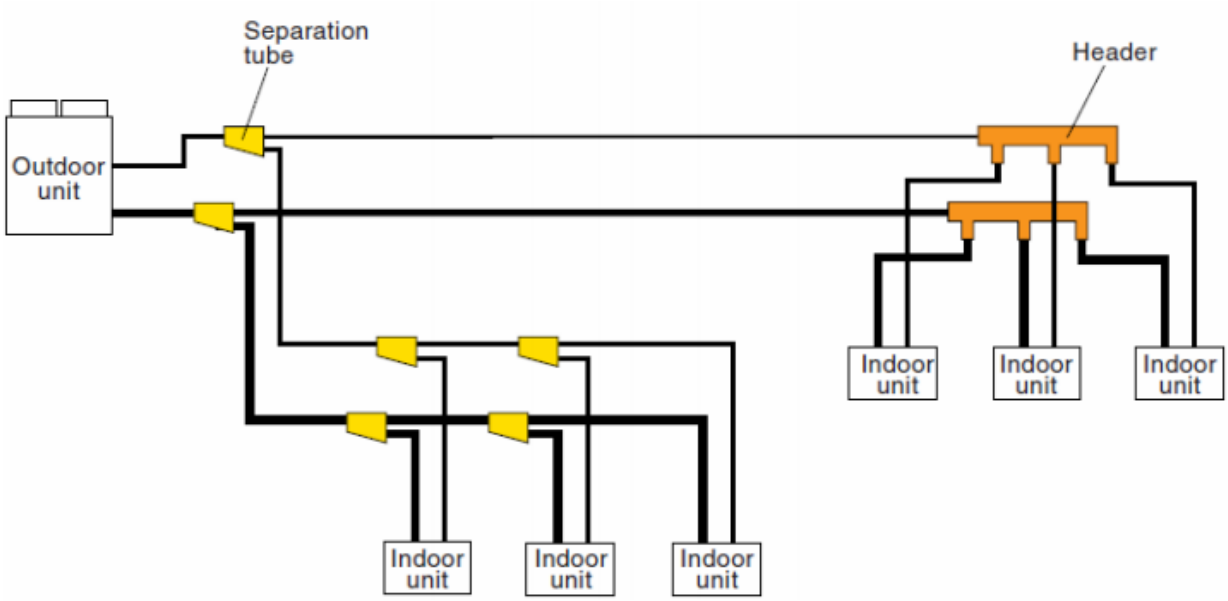

Figure (6.4): VRF heat pump systems

VRF heat pump systems are effectively applied in open plan areas, retail stores, cellular offices and any other areas that require cooling or heating during the same operational periods.

Heat Recovery VRF system (VRF-HR)

Variable refrigerant flow systems with heat recovery (VRF-HR) capability can operate simultaneously in heating and/or cooling mode, enabling heat to be used rather than rejected as it would be in traditional heat pump systems. VRF-HR systems are equipped with enhanced features like inverter drives, pulse modulating electronic expansion valves and distributed controls that allow system to operate in net heating or net cooling mode, as demanded by the space.

Each manufacturer has its own proprietary design (2-pipe or 3-pipe system), but most uses a three-pipe system (liquid line, a hot gas line and a suction line) and special valving arrangements. Each indoor unit is branched off from the 3 pipes using solenoid valves. An indoor unit requiring cooling will open its liquid line and suction line valves and act as an evaporator. An indoor unit requiring heating will open its hot gas and liquid line valves and will act as a condenser.

Typically, extra heat exchangers in distribution boxes are used to transfer some reject heat from the superheated refrigerant exiting the zone being cooled to the refrigerant that is going to the zone to be heated. This balancing act has the potential to produce significant energy savings.

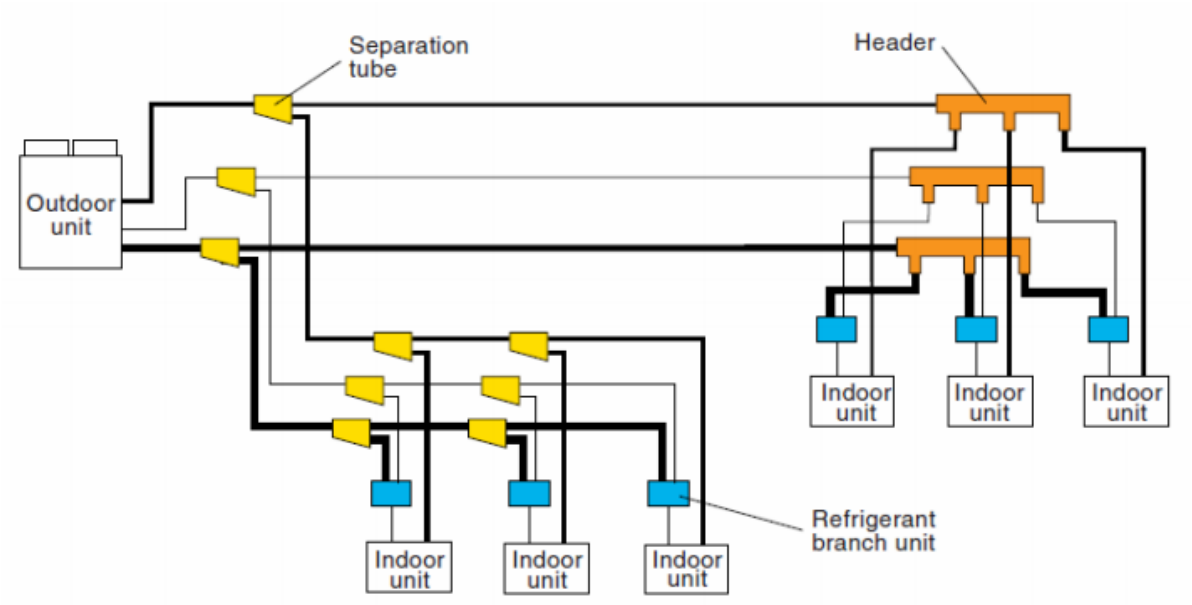

Figure (6.5): Heat recovery type VRF system

VRF-HR mixed mode operation leads to energy savings as both ends of the thermodynamic cycle are delivering useful heat exchange. If a system has a cooling COP (Coefficient of Performance) of 3, and a heating COP of 4, then heat recovery operation could yield a COP as high as 7.

VRF-HR systems work best when there is a need for some of the spaces to be cooled and some of them to be heated during the same period. This often occurs in the winter in medium-sized to large sized buildings with a substantial core or in the areas on the north and south sides of a building.

6.1.4 Refrigerant modulation in a VRF system

VRV/VRF technology is based on the simple vapor compression cycle (same as conventional split air conditioning systems) but gives you the ability to continuously control and adjust the flow of refrigerant to different internal units, depending on the heating and cooling needs of each area of the building. The refrigerant flow to each evaporator is adjusted precisely through a pulse wave electronic expansion valve in conjunction with an inverter and multiple compressors

of varying capacity, in response to changes in the cooling or heating requirement within the air conditioned space.

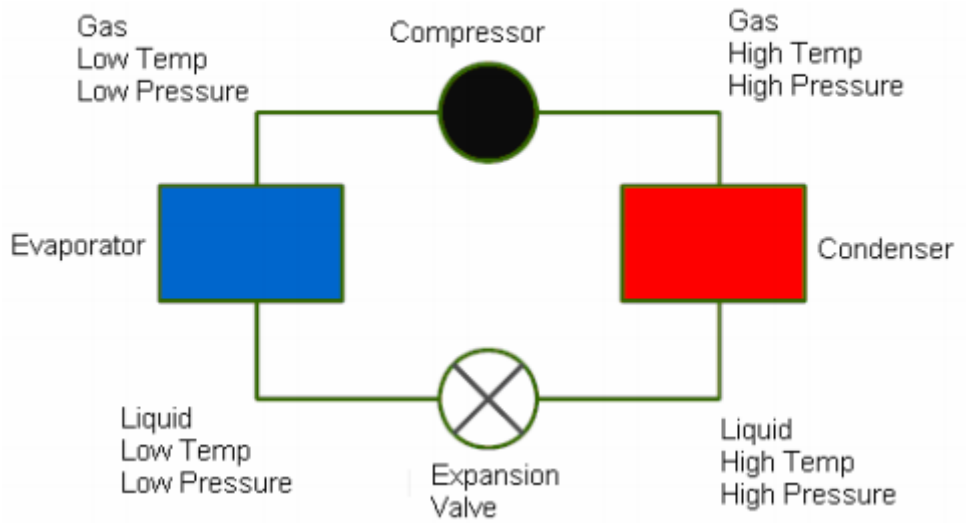

Figure (6.6): Basic refrigeration cycle

The fundamental of an air conditioning system is the use of a refrigerant to absorb heat from the indoor environment and transfer it to the external environment. In the cooling mode, indoor units are supplied with liquid refrigerant. The amount of refrigerant flowing through the unit is controlled via an expansion valve located inside the unit. When the refrigerant enters the coil, it undergoes a phase change (evaporation) that extracts heat from the space, thereby cooling the room. The heat extracted from the space is exhausted to the ambient air.

Refrigeration systems can operate on reverse cycle mode with an inclusion of special 4-way reversing valve, enabling the absorption of heat from the external environment and using this heat to raise the internal temperature. When in the heating mode, indoor units are supplied with a hot gas refrigerant. Again, the amount of hot gas flowing through the unit is controlled via the same electronic expansion valve. As with the liquid refrigerant, the hot gas undergoes a phase change (condensation), which releases heat energy into the space. These are called heat pump systems. Heat pumps provide both heating and cooling from the same unit and due to added heat of compression, the efficiency of a heat pump in the heating mode is higher compared to the cooling cycle.

Expansion valve is the component that controls the rate at which liquid refrigerant can flow into an evaporator coil.

As the evaporator load increases, available refrigerant will boil off more rapidly. If it is completely evaporated prior to exiting the evaporator, the vapor will continue to absorb heat (superheat). Although superheating ensures total evaporation of the liquid refrigerant before it goes into the compressor, the density of vapor which quits the evaporator and enters the compressor is reduced leading to reduced refrigeration capacity.

The inadequate or high super heat in a system is a concern.

- Too little: liquid refrigerant entering a compressor washes out the oil causing premature failure.
- Too much: valuable evaporator space is wasted and possibly causing compressor overheating problems.

The shortcomings of thermostatic expansion valve (TXV) are offset by the modern electronic expansion valve. With an electronic expansion valve (EEV), you can tell the system what superheat you want and it will set it up.

EEV in a VRF system functions to maintain the pressure differential and also distribute the precise amount of refrigerant to each indoor unit. It allows for the fine control of the refrigerant to the evaporators and can reduce or stop the flow of refrigerant to the individual evaporator unit while meeting the targeted superheat.

6.1.5 Design considerations for VRF system

Deciding what HVAC system best suits your application will depend on several variables such as building characteristics, cooling and heating load requirements, peak occurrence, simultaneous heating and cooling requirements, fresh

air needs, accessibility requirements, minimum and maximum outdoor temperatures, sustainability, and acoustic characteristics.

Building Characteristics

VRF systems are typically distributed systems – the outdoor unit is kept at a far off location like the top of the building or remotely at grade level and all the evaporator units are installed at various locations inside the building. Typically the refrigerant pipe-work (liquid and suction lines) is very long, running in several hundreds of feet in length for large multi-story buildings. Obviously, the long pipe lengths will introduce pressure losses in the suction line and, unless the correct diameter of pipe is selected, the indoor units will be starved of refrigerant resulting in insufficient cooling to the end user. So it is very important to make sure that the pipe sizing is done properly, both for the main header pipe as well as the feeder pipes that feed each indoor unit. The maximum allowable length varies among different manufacturers; however the general guidelines are as follows:

- The maximum allowable vertical distance between an outdoor unit and its farthest indoor unit is 164 ft
- The maximum permissible vertical distance between two individual indoor units is 49 ft
- The maximum overall refrigerant piping lengths between outdoor and the farthest indoor unit is up to 541 ft

Note: The longer the lengths of refrigerant pipes, the more expensive the initial and operating costs.

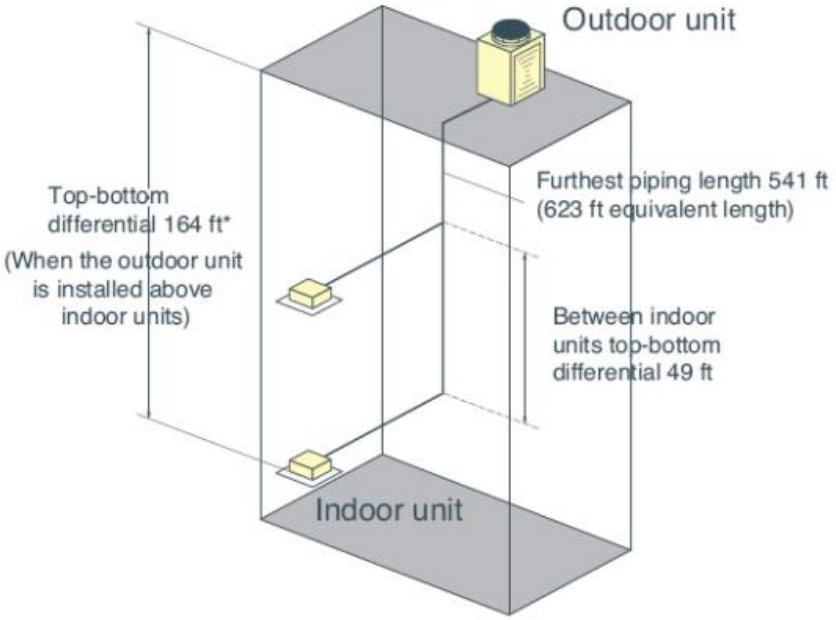

Figure (6.7): Design limits in VRF system

As stated, the refrigerant piping criteria varies from manufacturer to manufacture, for example for one of the Japanese manufacturer (Fujitsu), the system design limits are:

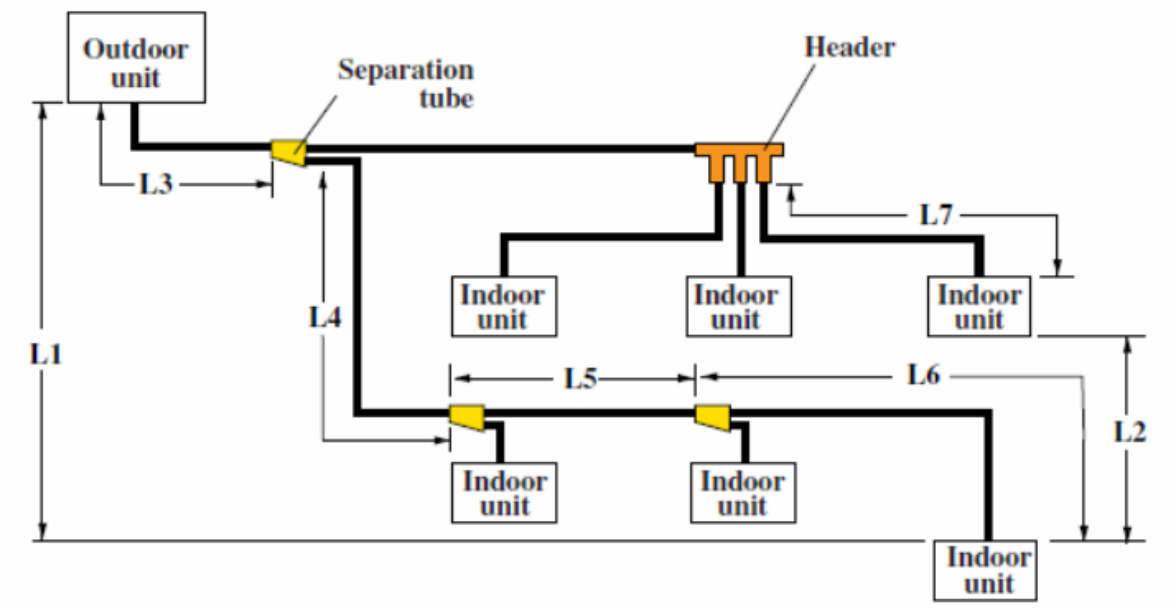

Figure (6.8): Design limits in (Fujitsu) VRF system

- L1: Maximum height difference between outdoor unit and indoor unit = 50m
- L2: Maximum height difference between indoor unit and indoor unit = 15m

- L3: Maximum piping length from outdoor unit to first separation tube = 70m
- [L3+L4+L5+L6]: Maximum piping length from outdoor unit to last indoor unit = 100m
- L6 & L7: Maximum piping length from header to indoor unit = 40m
- Total piping length = 200m (Liquid pipe length)

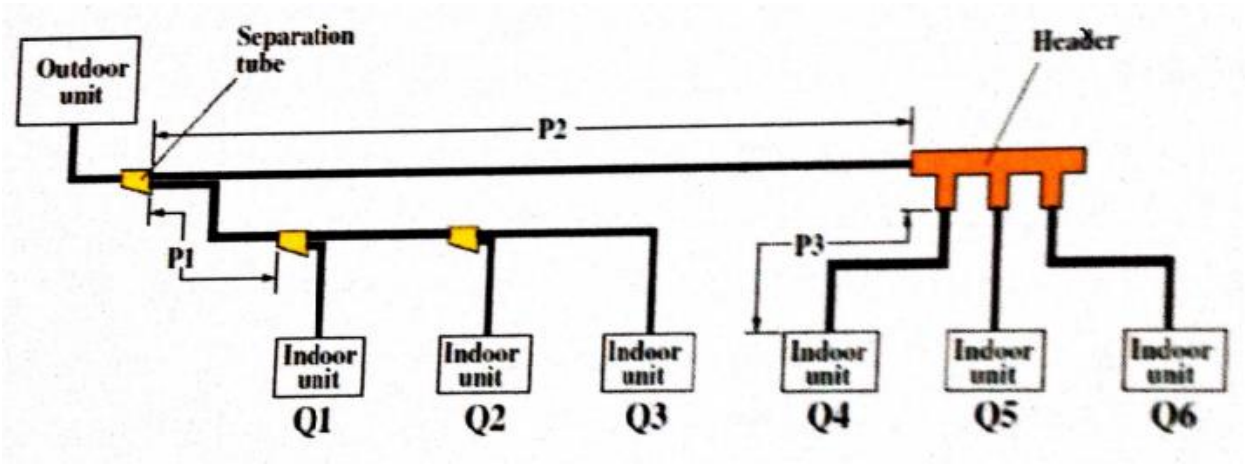

Figure (6.9): Pipe sizing for VRF system

- Size of P1: Depends on the total capacity of (Q1+Q2+Q3)
- Size of P2: Depends on the total capacity of (Q4+Q5+Q6)
- Size of P3: Depends on the total capacity of (Q4)

<u>Building Load Profile</u>

When selecting a VRF system for a new or retrofit application, the following assessment tasks should be carried out:

- Determine the functional and operational requirements by assessing the cooling load and load profiles including location, hours of operation, number/type of occupants, equipment being used, etc.

- Determine the required system configuration in terms of the number of indoor units and the outdoor condensing unit capacity by taking into account the total capacity and operational requirements, reliability and maintenance considerations

Building a load profile helps determine the outdoor condensing unit compressor capacity. For instance, if there are many hours at low load, it is advantageous to install multiple compressors with at least one with inverter (speed adjustment) feature.

The combined cooling capacity of the indoor sections can match, exceed, or be lower than the capacity of the outdoor section connected to them. But as a normal practice:

- The indoor units are typically sized and selected based on the greater of the heating or cooling loads in the zone it serves, i.e. maximum peak load expected in any time of the year.
- The outdoor condensing unit is selected based on the load profile of the facility which is the peak load of all the zones combined at any one given time. The important thing here is that it is unlikely that all zones will peak at a given time so an element of diversity is considered for economic sizing. Adding up the peak load for each indoor unit and using that total number to size the outdoor unit will result in an unnecessarily oversized condensing unit. Although an oversized condensing unit with multiple compressors is capable of operating at lower capacity, too much over sizing sometimes reduces or ceases the modulation function of the expansion valve. As a rule of thumb, an engineer can specify an outdoor unit with a capacity anywhere between 70% and 130% of the combined capacities of the indoor units.

<u>Sustainability</u>

One attractive feature of the VRF system is its higher efficiency compared to conventional units. Cooling power in a VRF system is regulated by means of

adjusting the rotation speed of the compressor which can generate an energy saving around 30%.

A VRF system permits easy future expansion when the conditions demand. Oversizing however, should be avoided unless a future expansion is planned.

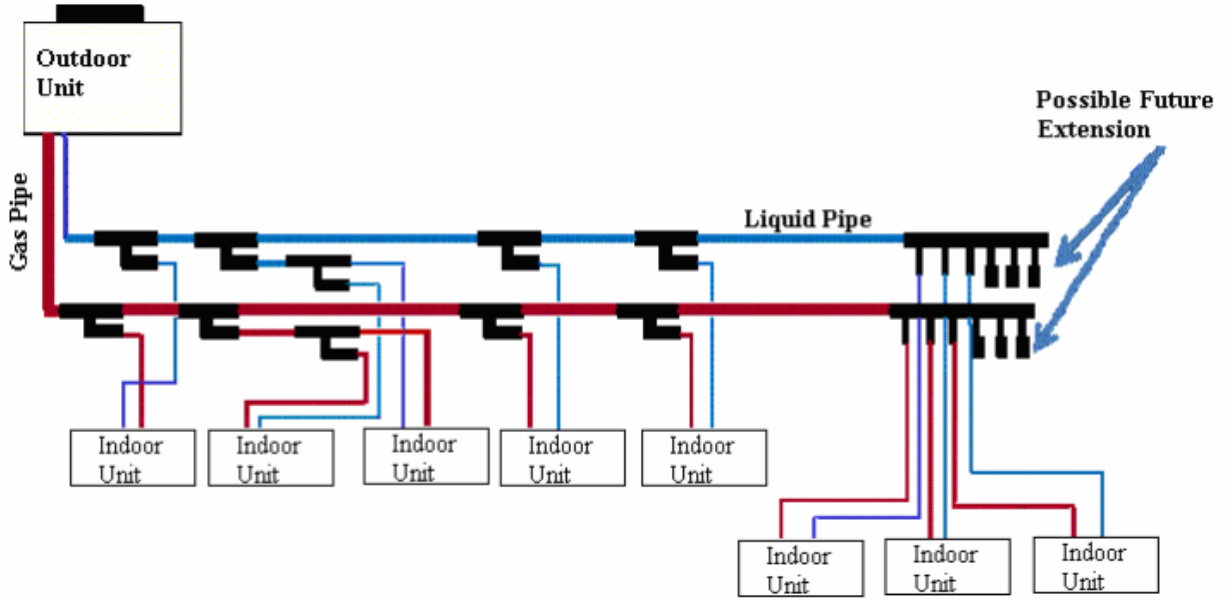

Figure (6.10): Pipe work schematic

Other sustainability factors include:

- Use of non-ozone depleting environment-friendly refrigerants such as R 410a
- Opting for heat pump instead of electrical resistance heating in areas demanding both cooling and heating.

Heat pumps offer higher energy efficiency.

<u>Simultaneous Heating and Cooling</u>

Some manufacturers offer a VRF system with heat recovery feature which is capable of providing simultaneous heating and cooling. The cost of a VRF-HR is higher than that of a normal VRF heat pump unit and therefore its application should be carefully evaluated.

More economical design can sometimes be achieved by combining zones with similar heating or cooling requirements together. For example, the areas that may require

simultaneous heating and cooling are the parametric and interior zones. Parametric areas with lot of glazing and exposure especially towards west and south will have high load variations. A VRF heat pump type system is capable of providing simultaneous heating and cooling exceeding 6 tons cooling requirement.

Using VRF heat pump units for heating and cooling can increase building energy efficiency. The designer must evaluate the heat output for the units at the outdoor design temperature. Supplemental heating with electric resistors shall be considered only when the heating capacity of the VRF units is below the heating capacity required by the application. Even though supplemental heating is considered, the sequence of operation and commissioning must specify and prevent premature activation of supplemental heating.

First Costs

The installed cost of a VRF system is highly variable, project dependent, and difficult to pin down. Studies indicate that the total installed cost of a VRF system is estimated to be 5% to 20% higher than air or water cooled chilled water system, water source heat pump, or rooftop DX system providing equivalent capacity. This is mainly due to long refrigerant piping and multiple indoor evaporator exchanges with associated controls. Building owners often have no incentive to accept higher first costs, even if the claimed payback period is short, as the energy savings claims are highly unpredictable.

6.1.6 Advantages of VRF system

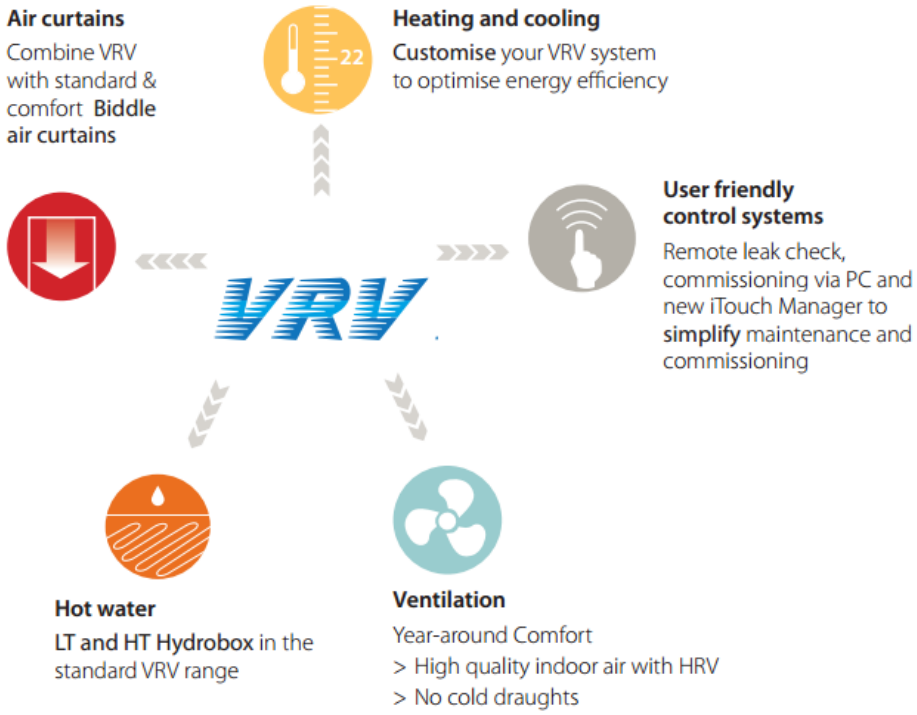

Figure (6.11): VRV provides a total solution for integrated climate control

VRF systems have several key benefits, including:

1. Installation Advantages.

   VRF systems are lightweight and modular. Each module can be transported easily and fits into a standard elevator.

2. Design Flexibility.

   A single condensing unit can be connected to many indoor units of varying capacity (e.g., 0.5 to 4 tons [1.75 to 14 kW]) and configurations (e.g., ceiling recessed, wall mounted, floor console). Current products enable up to 20 indoor units to be supplied by a single condensing unit. Modularity also makes it easy to adapt the HVAC system to expansion or reconfiguration of the space, which may require additional capacity or different terminal units.

3. Maintenance and Commissioning**.**

   VRF systems with their standardized configurations and sophisticated electronic controls are aiming toward near plug-and-play commissioning.

4. Comfort.

   Many zones are possible, each with individual set point control. Because VRF systems use variable speed compressors with wide capacity modulation capabilities, they can maintain precise temperature control, generally within ±1°F (±0.6°C), according to manufacturers' literature.

5. Energy Efficiency.

   The energy efficiency of VRF systems derives from several factors. The VRF essentially eliminates duct losses, which are often estimated to be between (10-20) percent of total airflow in a ducted system. VRF systems typically include two to three compressors, one of which is variable speed, in each condensing unit, enabling wide capacity modulation. This approach yields high part-load efficiency, which translates into high seasonal energy efficiency, because HVAC systems typically spend most of their operating hours in the range of 40% to 80% of maximum capacity.

6. Refrigerant piping runs of more than 200 feet (60.96 m) are possible and outdoor units are available in sizes up to 240,000 Btu/ h (60478.98 kW).

6.1.7 Selection units

This section talks about selection of outdoor and indoor units of VRF system, depending on the "Samsung VRF catalogue", since this company product is existing in Hebron.

Outdoor and indoor units are selected according to the thermal load of the building.

Indoor unit

In this project there are two types of indoor units selected, which are split and cassette units. The split unit is used for bedrooms, and the cassette units are used for guest rooms, living rooms, and kitchen.

The figure below shows the two types of selected units:

Figure (6.12): Spilt and cassette indoor units

Table (6.1): Selection indoor units for the building

Floor	Type	Area (m^2)	Heating Load (kW)	Cooling Load (kW)
Ground floor	Chess room	58.44	15.19	19.87
	sweedi	77.76	20.22	26.44
	tenes	103.02	26.79	35.03
	Waiting room	47.30	12.3	16.08
	bofeeh	76.38	19.86	25.97
	storage	21.03	5.47	7.15
	cardoor	304.74	79.23	103.61
	Masra7	239.17	62.19	81.32
First floor	meetig	28.6	7.44	9.72
	Met student	19.13	4.97	6.5
	Class 1	77.82	20.23	26.46
	Class 2	103.02	26.79	35.03
	Rest4	39.88	10.37	13.56
	meeting	29.64	7.71	10.08
	manger	20.42	5.31	6.94
	rest	55.56	14.45	18.89
	Rest 2	115.28	29.97	39.2
	card	180.67	46.97	61.43

Table (6.2): Selection outdoor units for the building

Floor	type of Out door unit	Type	Area (m^2)	Heating Load (kW)	Cooling Load (kW)
Ground floor	1	**Chess room**	**58.44**	**202.965**	**313.208**
		sweedi	**77.76**		
		tenes	**103.02**		
		Waiting room	**47.30**		
Ground floor		**bofeeh**	**76.38**		
		storage	**21.03**		
		cardoor	**304.74**		
		Masra7	**239.17**		
First floor	2	**meetig**	**28.6**	**146.56**	**236.896**
		Met student	**19.13**		
		Class 1	**77.82**		
		Class 2	**103.02**		
		Rest4	**39.88**		
First floor		**meeting**	**29.64**		
		manger	**20.42**		
		rest	**55.56**		
		Rest 2	**115.28**		
		card	**180.67**		

6.2 Mechanical ventilation

Ventilation is the process of supplying and removing air by natural or mechanical means to and from a building. The design of a building's ventilation

system should meet the minimum requirements of the building (Ventilating Systems) regulations.

There are two ways for Ventilation:

- “Natural ventilation” covers uncontrolled inward air leakage through cracks, windows, doorways and vents (infiltration) as well as air leaving a room (exfiltration) through the same routes. Natural ventilation is strongly affected by weather conditions and is often unreliable.
- Mechanical or forced ventilation is provided by air movers or fans in the wall, roof or air conditioning system of a building. It promotes the supply or exhaust air flow in a controllable manner.

The air flow rate into a room space, for general mechanical supply and extract systems, is usually expressed in:

1. Air changes per hour
2. An air flow rate per person
3. An air flow rate per unit floor area

An air change per hour (ACH) is the most frequently used basis for calculating the required airflow. Air changes per hour are the number of times in one hour an equivalent room volume of air will be introduced into, or extracted from the room space.

Air flow rate per person are generally expressed as liters per person (L/P), and are usually used where fresh air ventilation is required within occupied spaces.

Airflow rates per unit floor area are similar in effect to air changes per hour except that the height of the room is not taken into consideration.

Mechanical ventilation system in this project is just for bathrooms and kitchens.

6.2.1 Purposes of ventilation

Ventilation in a building serves to provide fresh and clean air, to maintain a thermally comfortable work environment, and to remove or dilute airborne contaminants in order to prevent their accumulation in the air. Air conditioning is a common type of ventilation system in modern office buildings. It draws in outside air and after filtration, heating or cooling and humidification, circulates it throughout the building. A small portion of the return air is expelled to the outside environment to control the level of indoor air Contaminants.

6.2.2 Designing of mechanical ventilation

Steps of designing mechanical ventilation:

- Calculate the required ventilating rate of air by using “Ventilation Rates Calculator” software
- Calculate the volume of the room in (m^3)
- Calculate the flow rate of air by using air changes per hour method

Books:	[1] M. A. A. M. Ashamed, Heating and Air Conditioning for Residential Buildings, National Library Department, Jordan, 2007. [2] Heat Transfer a Practical Approach, 2 edition , Yunus A. Cengel , 2002 ,896. [3] Fundamentals of Heat and Mass Transfer, 5 edition , Frank P. Incropra & Daved P. Dewitt ,2001, 944. [4] Heating Ventilation and Air Conditioning Analysis and Design, 4 edition , John Wiley & Sons Inc , 1993, 296-635 . [5] B. Stein, Building Technology Mechanical and Electrical Systems, John Wiley & sons, Canada, 1997. [6] Palestinian code.
Websites:	[1](Water pump), dp-@dp-pumps.com [2] (Fire pump), www.groundfos.com [3] (Fire catalog),www.normteknik.com.tr

Appendix-A

TABLE A-1: Cooling load temperature differences (CLTD) for sunlit roofs,°C.

No.	Roof Description of Construction	U_{ro}, W/m²·°C	Solar Time, h																							
			1	2	3	4	5	6	7	8	9	10	11	12	13	14	15	16	17	18	19	20	21	22	23	24
	Without Suspended Ceiling																									
1	Steel sheet with 25.4 mm (or 50.8 mm) insulation	1.209 (0.704)	0	−1	−2	−2	−3	−2	3	11	19	27	34	40	43	44	43	39	33	25	17	10	7	5	3	1
2	25 mm wood with 25.4 mm insulation	0.963	3	2	0	−1	−2	−2	−1	2	8	15	22	29	35	39	41	41	39	35	29	21	15	11	8	5
3	101.6 mm L.W. concrete	1.209	5	3	1	0	−1	−2	−2	1	5	11	18	25	31	36	39	40	40	37	32	25	19	14	10	7
4	50.8 mm H.W. concrete 25.4 mm (or 50.8 mm) insulation	1.170 (0.693)	7	5	3	2	0	−1	0	2	χ6	11	17	23	28	33	36	37	37	34	30	25	20	16	12	10
5	25.4 mm wood with 50.8 insulation	0.619	2	0	−2	−3	−4	−4	−4	−2	3	9	15	22	27	32	35	36	35	32	27	20	14	10	6	3
6	152.4 mm L.W. concrete	0.897	12	10	7	5	3	2	1	0	2	4	8	13	18	24	29	33	35	36	35	32	28	24	19	16
7	63.5 mm wood with 25.4 mm insulation	0.738	16	13	11	9	7	6	4	3	4	5	8	11	15	19	23	27	29	31	31	30	27	25	22	19
8	203.4 mm L.W. concrete	0.715	20	17	14	12	10	8	6	5	4	4	5	7	11	14	18	22	25	28	30	30	29	27	25	22
9	101.6 mm H.W. concrete with 25.4 mm (or 50.8 mm) insulation	1.136 (0.681)	14	12	10	8	7	5	4	4	6	8	11	15	18	22	25	28	29	30	29	27	24	21	19	16
10	63.5 mm wood with insulation	0.528	18	15	13	11	9	8	6	5	5	5	7	10	13	17	21	24	27	28	29	29	27	25	23	20
11	Roof terrace system	0.602	19	17	15	14	12	11	9	8	7	8	8	10	12	15	18	20	22	24	25	26	25	24	22	21
12	152.4 mm H.W. concrete with 25.4 mm (or 50.8 mm) insulation	0.664	18	16	14	12	11	10	9	8	8	9	10	12	15	17	20	22	24	25	25	25	24	22	20	19
13	101.6 mm wood with 25.4 mm (or 50.8 mm) insulation	0.602 (0.443)	21	20	18	17	15	14	13	11	10	9	9	9	10	12	14	16	18	20	22	23	24	24	23	22

TABLE A-2: Latitude-Month correction factor LM, as applied to walls and horizontal roofs, north latitudes.

Lat.	Month	N	NNE NNW	NE NW	ENE WNW	E W	ESE WSW	SE SW	SSE SSW	S	Horizontal Roofs
16	December	−2.2	−3.3	−4.4	−4.4	−2.2	−0.5	2.2	5.0	7.2	−5.0
	Jan./Nov.	−2.2	−3.3	−3.8	−3.8	−2.2	−0.5	2.2	4.4	6.6	−3.8
	Feb./Oct.	−1.6	−2.7	−2.7	−2.2	−1.1	0.0	1.1	2.7	3.8	−2.2
	Mar/Sept.	−1.6	−1.6	−1.1	−1.1	−0.5	−0.5	0.0	0.0	0.0	−0.5
	Apr./Aug.	−0.5	0.0	−0.5	−0.5	−0.5	−1.6	−1.6	−2.7	−3.3	0.0
	May/July	2.2	1.6	1.6	0.0	−0.5	−2.2	−2.7	−3.8	−3.8	0.0
	June	3.3	2.2	2.2	0.5	−0.5	−2.2	−3.3	−4.4	−3.8	0.0
24	December	−2.7	−3.8	−5.5	−6.1	−4.4	−2.7	1.1	5.0	6.6	−9.4
	Jan./Nov.	−2.2	−3.3	−4.4	−5.0	−3.3	−1.6	−1.6	5.0	7.2	−6.1
	Feb./Oct.	−2.2	−2.7	−3.3	−3.3	−1.6	−0.5	1.6	3.8	5.5	−3.8
	Mar/Sept.	−1.6	−2.2	−1.6	−1.6	−0.5	−0.5	0.5	1.1	2.2	−1.6
	Apr./Aug.	−1.1	−0.5	0.0	−0.5	−0.5	−1.1	−0.5	−1.1	−1.6	0.0
	May/July	0.5	1.1	1.1	0.0	0.0	−1.6	−1.6	−2.7	−3.3	0.5
	June	1.6	1.6	1.6	0.5	0.0	−1.6	−2.2	−3.3	−3.3	0.5
32	December	−2.7	−3.8	−5.5	−6.1	−4.4	−2.7	1.1	5.0	6.6	−9.4
	Jan./Nov.	−2.7	−3.8	−5.0	−6.1	−4.4	−2.2	1.1	5.0	6.6	−8.3
	Feb./Oct.	−2.2	−3.3	−3.8	−4.4	−2.2	−1.1	2.2	4.4	6.1	−5.5
	Mar/Sept.	−1.6	−2.2	−2.2	−2.2	−1.1	−0.5	1.6	2.7	3.8	−2.7
	Apr./Aug.	−1.1	−1.1	−0.5	−1.1	0.0	−0.5	0.0	5.0	0.5	−0.5
	May/July	0.5	0.5	0.5	0.0	0.0	−0.5	−0.5	−1.6	−1.6	0.5
	June	0.5	1.1	1.1	0.5	0.0	−1.1	−1.1	−2.2	−2.2	1.1
40	December	−3.3	−4.4	−5.5	−7.2	−5.5	−3.8	0.0	3.8	5.5	−11.6
	Jan./Nov.	−2.7	−3.8	−5.5	−6.6	−5.0	−3.3	0.5	4.4	6.1	−10.5
	Feb./Oct.	−2.7	−3.8	−4.4	−5.0	−3.3	−1.6	1.6	4.4	6.6	−7.7
	Mar/Sept.	−2.2	−2.7	−2.7	−3.3	−1.6	0.5	2.2	3.8	5.5	−4.4
	Apr./Aug.	−1.1	−1.6	−1.6	−1.1	0.0	0.0	1.1	1.6	2.2	1.6
	May/July	0.0	0.0	0.0	0.0	0.0	0.0	0.0	0.0	0.5	0.5
	June	0.5	0.5	0.5	0.5	0.0	0.5	0.0	0.0	−0.5	1.1
48	December	−3.3	−4.4	−6.1	−7.7	−7.2	−5.5	−1.6	1.1	3.3	−13.8
	Jan./Nov.	−3.3	−4.4	−6.1	−7.2	−6.1	−4.4	−0.5	2.7	4.4	−13.3
	Feb./Oct.	−2.7	−3.8	−5.5	−6.1	−4.4	−2.7	0.5	4.4	6.1	−10.0
	Mar/Sept.	−2.2	−3.3	−3.3	−3.8	−2.2	−0.5	2.2	4.4	6.1	−6.1
	Apr./Aug.	−1.6	−1.6	−1.6	−1.6	−0.5	0.0	2.2	3.3	3.8	−2.7
	May/July	0.0	−0.5	0.0	0.0	0.5	0.5	1.6	1.6	2.2	0.0
	June	0.5	0.5	1.1	0.5	1.1	0.5	1.1	1.1	1.6	1.1

TABLE A-3 : Cooling load temperature differences (CLTD) for various construction groups of sunlit walls, ℃.

North Latitude Wall Facing	Solar Time *h*																								Hour of Max. CLTD	Min. CLTD	Max. CLTD	Difference CLTD
	1	2	3	4	5	6	7	8	9	10	11	12	13	14	15	16	17	18	19	20	21	22	23	24				
	Group A Walls																											
N	8	8	8	7	7	7	7	6	6	6	6	6	6	6	6	6	6	6	7	7	7	7	8	8	2	6	8	2
NE	11	11	10	10	10	9	9	9	8	8	8	9	9	9	9	10	10	10	11	11	11	11	11	11	22	8	11	3
E	14	13	13	13	12	12	11	11	10	10	10	11	11	12	12	13	13	13	14	14	14	14	14	14	22	10	14	4
SE	13	13	13	12	12	11	11	10	10	10	10	10	10	11	11	12	12	13	13	13	13	13	13	13	22	10	13	3
S	11	11	11	11	10	10	9	9	9	8	8	8	8	8	8	8	9	9	10	10	11	11	11	11	23	8	11	3
SW	14	14	14	14	13	13	12	12	11	11	10	10	10	9	9	10	10	10	11	12	13	13	14	14	24	9	14	5
W	15	15	15	14	14	14	13	13	12	12	11	11	10	10	10	10	10	11	11	12	13	14	14	15	1	10	15	5
NW	12	12	11	11	11	11	10	10	10	9	9	8	8	8	8	8	8	8	9	9	10	11	11	11	1	8	12	4
	Group B Walls																											
N	8	8	8	7	7	6	6	6	5	5	5	5	5	5	5	6	6	7	7	8	8	8	8	8	24	5	8	3
NE	11	10	10	9	9	8	7	7	7	7	8	8	9	9	10	10	11	11	11	12	12	12	11	11	21	7	12	5
E	13	13	12	11	10	10	9	8	8	9	9	10	12	13	13	14	14	15	15	15	15	15	14	14	20	8	15	7
SE	13	12	12	11	10	10	9	8	8	8	8	9	10	11	12	13	14	14	14	14	14	14	14	14	21	8	14	6
S	12	11	11	10	9	9	8	7	7	6	6	6	6	7	8	9	10	11	11	12	12	12	12	12	23	6	12	6
SW	15	15	14	13	13	12	11	10	9	9	8	8	7	7	8	9	10	11	13	14	15	15	16	16	24	7	16	9
W	16	16	15	14	14	13	12	11	10	9	9	8	8	8	8	8	9	11	12	14	15	16	16	17	24	8	17	9
NW	13	12	12	11	11	10	9	9	8	7	7	7	6	6	7	7	8	8	9	11	12	13	13	13	24	6	13	7
	Group C Walls																											
N	9	8	7	7	6	5	5	4	4	4	4	4	5	5	6	6	7	8	9	9	9	10	9	9	22	4	10	6
NE	10	10	9	8	7	6	6	6	6	7	8	10	10	11	12	12	12	13	13	13	13	12	12	11	20	6	13	7
E	13	12	11	10	9	8	7	7	8	9	11	13	14	15	16	16	17	17	16	16	16	15	14	13	18	7	17	10
SE	13	12	11	10	9	8	7	6	7	7	9	10	12	14	15	16	16	16	16	16	16	15	14	13	19	6	16	10
S	12	11	10	9	8	7	6	6	5	5	5	5	6	8	9	11	12	13	14	14	14	14	13	12	20	5	14	9
SW	16	15	14	12	11	10	9	8	7	7	6	6	6	7	8	10	12	14	16	18	18	18	13	17	22	6	18	12
W	17	16	15	14	12	11	10	9	8	7	7	7	7	7	8	9	11	13	16	18	19	20	19	18	22	7	20	13

TABLE A-4 : Description of wall construction groups.

Group No.	Description Of Construction	$U_{ov.}$ W/m²·°C
	101.6 mm Face Brick + (Brick)	
C	Air space + 101.6 mm face brick	2.033
D	101.6 mm common brick	2.356
C	25.4 mm insulation or air space + 101.6 mm common brick	0.987-1.709
B	50.6 mm insulation + 101.6 mm common brick	0.630
B	203.2 mm common brick	1.714
A	Insulation or air space + 203.2 mm common brick	0.874-1.379
	101.6 mm Face Brick + (H.W. Concrete)	
C	Air space + 50.8 mm concrete	1.987
B	50.8 mm insulation + 101.6 mm concrete	0.658
A	Air space or insulation + 203.2 mm or more concrete	0.625-0.636
	101.6 mm Face Brick + (L.W. or H.W Concrete Block)	
E	101.6 mm block	1.811
D	Air space or insulation + 101.60 mm block	0.868-1.397
D	203.2 mm block	1.555
C	Air space or 25.4 mm insulation + 152.4 mm or 203.2 mm block	1.255-1.561
B	50.8 insulation + 203.2 mm block	0.545-0.607
	101.6 mm Face Brick + (Clay Tile)	
D	101.6 mm tile	2.163
D	Air space + 101.6 mm tile	1.595
C	Insulation + 101.6 mm tile	0.959
C	203.2 mm tile	1.561
B	Air space or 25.4 mm insulation + 203.2 mm tile	0.806-1.255
A	50.8 mm insulation + 203.2 mm tile	0.551
	L.W. Concrete Wall + (Finish)	
E	101.5 mm concrete	3.321
D	101.6 mm concrete + 25.4 mm or 50.8 mm insulation	1.136 - 0.675
C	50.8 mm insulation+101.6 mm concrete	0.675
C	203.2 mm concrete	2.782
B	203.2 mm concrete + 25.4 mm or 50.8 mm insulation	1.061 - 0.653
A	203.2 mm concrete + 50.8 mm insulation	0.653
B	304.8 mm concrete	2.390
A	304.8 mm concrete + insulation	0.642
	L.W. and H.W. Concrete Block + (Finish)	
F	101.6 mm block + air space/insulation	0.914-1.493
E	50.8 mm insulation + 101.6 mm block	0.596-0.647
E	203.2 mm block	1.669-2.282
D	203.2 mm block + air space/insulation	0.846-0.982

TABLE A-5 : Solar heat gain factor (SHG) for sunlit glass, W/m^2, for a latitude angle of 32 °*N*.

Month	Jan.	Feb.	Mar.	Apr.	May	Jun.	Jul.	Aug.	Sep.	Oct.	Nov.	Dec.
N	76	85	101	114	120	139	126	117	104	88	76	69
NNE/NNW	76	85	117	252	350	385	350	249	110	88	76	69
NE/NW	91	205	338	461	536	555	527	445	325	199	91	69
ENE/WNW	331	470	577	631	656	656	643	615	546	451	325	265
E/W	552	647	716	716	694	675	678	691	678	615	546	511
ESE/WSW	722	764	748	691	628	596	612	663	716	738	710	688
SE/SW	786	782	716	590	489	439	473	571	688	754	773	776
SSE/SSW	789	732	615	445	213	262	303	429	596	710	776	795
S	776	697	555	363	233	189	227	350	540	678	767	795
Horizontal	555	685	795	855	874	871	861	836	770	672	552	498

TABLE A-6: Shading coefficient (SC) for glass windows without interior shading.

Type of Glass	Nominal Thickness, mm	Solar Trans.	Shading Coefficient, W/m^2·K	
			$h_o = 22.7$	$h_o = 17.0$
Single Glass				
Clear	3	0.84	1.00	1.00
	6	0.78	0.94	0.95
	10	0.72	0.90	0.92
	12	0.67	0.87	0.88
Heat absorbing	3	0.64	0.83	0.85
	6	0.46	0.69	0.73
	10	0.33	0.60	0.64
	12	0.42	0.53	0.58
Double Glass				
Regular	3	—	0.90	—
Plate	6	—	0.83	—
Reflective	6	—	0.20-0.40	—
Insulating Glass				
Clear	3	0.71	0.88	0.88
	6	0.61	0.81	0.82
Heat absorbing*	6	0.36	0.55	0.58

TABLE A-7: Cooling load factors (CLF) for glass windows without interior shading, north latitudes.

Glass Facing	Building Construction	Solar Time, h																
		1	2	3	4	5	6	7	8	9	10	11	12	13	14	15	16	17
	L	0.17	0.14	0.11	0.09	0.08	0.33	0.24	0.48	0.56	0.61	0.71	0.76	0.80	0.82	0.82	0.79	0.75
N	M	0.23	0.20	0.18	0.16	0.14	0.34	0.14	0.46	0.53	0.59	0.65	0.70	0.73	0.75	0.76	0.74	0.75
Shaded	H	0.25	0.23	0.21	0.20	0.19	0.38	0.45	0.49	0.55	0.60	0.65	0.69	0.72	0.72	0.72	0.70	0.70
	L	0.06	0.05	0.04	0.03	0.03	0.26	0.43	0.47	0.44	0.41	0.40	0.39	0.39	0.38	0.36	0.33	0.30
NNE	M	0.09	0.08	0.07	0.06	0.06	0.24	0.38	0.42	0.39	0.37	0.37	0.36	0.36	0.36	0.34	0.33	0.30
	H	0.11	0.10	0.09	0.09	0.08	0.26	0.39	0.42	0.39	0.36	0.35	0.34	0.34	0.33	0.32	0.31	0.28
	L	0.04	0.04	0.03	0.02	0.02	0.23	0.41	0.51	0.51	0.45	0.39	0.36	0.33	0.31	0.28	0.26	0.23
NE	M	0.07	0.06	0.06	0.05	0.04	0.21	0.36	0.44	0.45	0.40	0.36	0.33	0.31	0.30	0.28	0.26	0.24
	H	0.09	0.08	0.08	0.07	0.07	0.23	0.37	0.44	0.44	0.39	0.34	0.31	0.29	0.27	0.26	0.24	0.22
	L	0.04	0.03	0.03	0.02	0.02	0.21	0.40	0.52	0.57	0.53	0.45	0.39	0.34	0.31	0.28	0.25	0.22
ENE	M	0.07	0.06	0.05	0.05	0.04	0.20	0.35	0.45	0.49	0.47	0.41	0.36	0.33	0.30	0.28	0.26	0.23
	H	0.09	0.09	0.08	0.07	0.07	0.22	0.36	0.46	0.49	0.45	0.38	0.31	0.30	0.27	0.25	0.23	0.21
	L	0.04	0.03	0.03	0.02	0.02	0.19	0.37	0.51	0.57	0.57	0.50	0.42	0.37	0.32	0.29	0.25	0.22
E	M	0.07	0.06	0.06	0.05	0.05	0.18	0.33	0.44	0.50	0.51	0.46	0.39	0.35	0.31	0.29	0.26	0.23
	H	0.09	0.09	0.08	0.08	0.07	0.20	0.34	0.45	0.49	0.49	0.43	0.39	0.32	0.29	0.26	0.24	0.22
	L	0.05	0.04	0.03	0.03	0.02	0.17	0.34	0.49	0.58	0.61	0.57	0.48	0.41	0.36	0.32	0.28	0.24
ESE	M	0.08	0.07	0.06	0.05	0.05	0.16	0.31	0.43	0.51	0.54	0.51	0.44	0.39	0.35	0.32	0.29	0.26
	H	0.10	0.09	0.09	0.08	0.08	0.19	0.32	0.43	0.50	0.52	0.49	0.41	0.36	0.32	0.29	0.26	0.24

	L	0.05	0.04	0.04	0.03	0.03	0.13	0.28	0.43	0.55	0.62	0.63	0.57	0.48	0.42	0.37	0.33	0.28
SE	M	0.09	0.08	0.07	0.06	0.05	0.14	0.26	0.38	0.48	0.54	0.56	0.51	0.45	0.40	0.36	0.33	0.29
	H	0.11	0.10	0.10	0.09	0.08	0.17	0.28	0.40	0.49	0.53	0.53	0.48	0.41	0.36	0.33	0.30	0.27
	L	0.07	0.05	0.04	0.04	0.03	0.06	0.15	0.29	0.43	0.55	0.63	0.64	0.60	0.25	0.45	0.40	0.35
SSE	M	0.11	0.09	0.08	0.07	0.06	0.08	0.16	0.26	0.38	0.58	0.55	0.57	0.54	0.48	0.43	0.39	0.35
	H	0.12	0.11	0.11	0.10	0.09	0.12	0.19	0.29	0.40	0.49	0.54	0.55	0.51	0.44	0.39	0.35	0.31
	L	0.08	0.07	0.05	0.04	0.04	0.06	0.09	0.14	0.22	0.34	0.48	0.59	0.65	0.65	0.59	0.50	0.43
S	M	0.12	0.11	0.09	0.08	0.07	0.08	0.11	0.14	0.21	0.31	0.42	0.52	0.57	0.58	0.53	0.47	0.41
	H	0.13	0.12	0.12	0.11	0.10	0.11	0.14	0.17	0.24	0.33	0.43	0.51	0.56	0.55	0.50	0.43	0.37
	L	0.10	0.08	0.07	0.06	0.05	0.06	0.09	0.11	0.15	0.19	0.27	0.39	0.52	0.62	0.67	0.65	0.58
SSW	M	0.14	0.12	0.11	0.09	0.08	0.09	0.11	0.13	0.15	0.18	0.25	0.35	0.46	0.55	0.59	0.59	0.53
	H	0.15	0.14	0.13	0.12	0.11	0.12	0.14	0.16	0.18	0.21	0.27	0.37	0.46	0.53	0.57	0.55	0.49
	L	0.12	0.10	0.08	0.06	0.05	0.06	0.08	0.10	0.12	0.14	0.16	0.24	0.36	0.49	0.60	0.66	0.66
SW	M	0.15	0.14	0.12	0.10	0.09	0.09	0.10	0.12	0.13	0.15	0.17	0.23	0.33	0.44	0.53	0.58	0.59
	H	0.15	0.14	0.13	0.12	0.11	0.12	0.13	0.14	0.16	0.17	0.19	0.25	0.34	0.44	0.52	0.56	0.56
	L	0.12	0.10	0.08	0.07	0.05	0.06	0.07	0.09	0.10	0.12	0.13	0.17	0.26	0.40	0.52	0.62	0.66
WSW	M	0.15	0.13	0.12	0.10	0.09	0.09	0.10	0.11	0.12	0.13	0.14	0.17	0.24	0.35	0.46	0.54	0.58
	H	0.15	0.14	0.13	0.12	0.11	0.11	0.12	0.13	0.14	0.15	0.16	0.19	0.26	0.36	0.46	0.53	0.56
	L	0.12	0.10	0.08	0.06	0.05	0.06	0.07	0.08	0.10	0.11	0.12	0.14	0.20	0.32	0.45	0.57	0.64

Glass Facing	Building Construction	Solar Time, h																
		1	2	3	4	5	6	7	8	9	10	11	12	13	14	15	16	17
W	M	0.15	0.13	0.11	0.10	0.09	0.09	0.09	0.10	0.11	0.12	0.13	0.14	0.19	0.29	0.40	0.50	0.56
	H	0.14	0.13	0.12	0.11	0.10	0.11	0.12	0.13	0.14	0.14	0.15	0.16	0.21	0.30	0.40	0.49	0.54
	L	0.12	0.10	0.08	0.06	0.05	0.06	0.07	0.09	0.10	0.12	0.13	0.15	0.17	0.26	0.40	0.53	0.63
WNW	M	0.15	0.13	0.11	0.10	0.09	0.09	0.10	0.11	0.12	0.11	0.14	0.15	0.17	0.24	0.35	0.47	0.55
	H	0.14	0.13	0.12	0.11	0.10	0.11	0.12	0.13	0.14	0.15	0.16	0.17	0.18	0.25	0.36	0.46	0.53
	L	0.11	0.09	0.08	0.06	0.05	0.06	0.08	0.10	0.12	0.14	0.16	0.17	0.19	0.23	0.33	0.47	0.59
NW	M	0.14	0.12	0.11	0.09	0.08	0.09	0.10	0.11	0.13	0.14	0.16	0.17	0.18	0.21	0.30	0.42	0.51
	H	0.14	0.12	0.11	0.10	0.10	0.10	0.12	0.13	0.15	0.16	0.18	0.18	0.19	0.22	0.30	0.41	0.50
	L	0.12	0.09	0.08	0.06	0.05	0.07	0.11	0.14	0.18	0.22	0.25	0.27	0.29	0.30	0.33	0.44	0.57
NNW	M	0.15	0.13	0.11	0.10	0.09	0.10	0.12	0.15	0.18	0.21	0.23	0.26	0.27	0.28	0.31	0.39	0.51
	H	0.14	0.13	0.12	0.11	0.10	0.12	0.15	0.17	0.20	0.23	0.25	0.26	0.28	0.28	0.31	0.38	0.49
	L	0.11	0.09	0.07	0.06	0.05	0.07	0.14	0.24	0.16	0.48	0.58	0.66	0.72	0.74	0.73	0.67	0.59
HORIZ.	M	0.16	0.14	0.12	0.11	0.11	0.11	0.16	0.24	0.13	0.43	0.52	0.59	0.64	0.67	0.66	0.62	0.56
	H	0.17	0.16	0.15	0.14	0.13	0.15	0.20	0.28	0.16	0.45	0.52	0.59	0.62	0.64	0.62	0.58	0.51

TABLE A-8 : Cooling load factors (CLF) for glass windows with interior shading, north latitudes.

Fenestration Facing	Solar Time, *h*																
	1	2	3	4	5	6	7	8	9	10	11	12	13	14	15	16	17
N	0.08	0.07	0.06	0.06	0.07	0.73	0.66	0.65	0.73	0.80	0.86	0.89	0.89	0.86	0.82	0.75	0.78
NNE	0.03	0.03	0.02	0.02	0.03	0.64	0.77	0.62	0.42	0.37	0.37	0.37	0.36	0.35	0.32	0.28	0.23
NE	0.03	0.02	0.02	0.02	0.02	0.56	0.76	0.74	0.58	0.37	0.29	0.27	0.26	0.24	0.22	0.20	0.16
ENE	0.03	0.02	0.02	0.02	0.02	0.52	0.76	0.80	0.71	0.52	0.31	0.26	0.24	0.22	0.20	0.18	0.15
E	0.03	0.02	0.02	0.02	0.02	0.47	0.72	0.80	0.76	0.62	0.41	0.27	0.24	0.22	0.20	0.17	0.14
ESE	0.03	0.03	0.02	0.02	0.02	0.41	0.67	0.79	0.80	0.72	0.54	0.34	0.27	0.24	0.21	0.19	0.15
SE	0.03	0.03	0.02	0.02	0.02	0.30	0.57	0.74	0.81	0.79	0.68	0.49	0.33	0.28	0.25	0.22	0.18
SSE	0.04	0.03	0.03	0.03	0.02	0.12	0.31	0.54	0.72	0.81	0.81	0.71	0.54	0.38	0.32	0.27	0.22
S	0.04	0.04	0.03	0.03	0.03	0.09	0.16	0.23	0.38	0.58	0.75	0.83	0.80	0.68	0.50	0.35	0.27
SSW	0.05	0.04	0.04	0.03	0.03	0.09	0.14	0.18	0.22	0.27	0.43	0.63	0.78	0.84	0.80	0.66	0.46
SW	0.05	0.05	0.04	0.04	0.03	0.07	0.11	0.14	0.16	0.19	0.22	0.38	0.59	0.75	0.83	0.81	0.69
WSW	0.05	0.05	0.04	0.04	0.03	0.07	0.10	0.12	0.14	0.16	0.17	0.23	0.44	0.64	0.78	0.84	0.78
W	0.05	0.05	0.04	0.04	0.03	0.06	0.09	0.11	0.13	0.15	0.16	0.17	0.31	0.53	0.72	0.82	0.81
WNW	0.05	0.05	0.04	0.03	0.03	0.07	0.10	0.12	0.14	0.16	0.17	0.18	0.22	0.43	0.65	0.80	0.84
NW	0.05	0.04	0.04	0.03	0.03	0.07	0.11	0.14	0.17	0.19	0.20	0.21	0.22	0.30	0.52	0.73	0.82
NNW	0.05	0.05	0.04	0.03	0.03	0.11	0.17	0.22	0.26	0.30	0.32	0.33	0.34	0.34	0.39	0.61	0.82
HORIZ.	0.06	0.05	0.04	0.04	0.03	0.12	0.27	0.44	0.59	0.72	0.81	0.85	0.85	0.81	0.71	0.58	0.42

TABLE A-9 : Instantaneous heat gain from occupants in units of Watts.

Type of Activity	Typical Application	Total Heat Dissipation Adult Male	Total Adjusted[a] Heat Dissipation	Sensible Heat, W	Latent Heat, W
Seated at rest	*Theater* :				
	Matinee	111.5	94.0	64.0	30.0
	Evening	111.5	100.0	70.0	30.0
Seated, very light work	Offices, hotels, apartments, restaurants	128.5	114.0	70.0	44.0
Moderately active office work	Offices, hotels, apartments	135.5	128.5	71.5	57.0
Standing, light work, walking	Department store, retail store, supermarkets	157.0	143.0	71.5	71.5
Walking, seated	Drug store	157.0	143.0	71.5	71.5
Standing, walking slowly	Bank	157.0	143.0	71.5	71.5
Sedentary work	Restaurant	168.5	157.0	78.5	78.5
Light bench work	Factory	238.0	214.0	78.0	136.0
Moderate work	Small-Parts assembly	257.0	243.0	87.0	156.0
Moderate dancing	Dance halls	257.0	243.0	87.0	156.0
Walking at 1.5 m/s	Factory	286.0	285.0	107.0	178.0
Bowling (participant)	Bowling alley	428.5	414.0	166.0	248.0
Heavy work	Factory	428.5	414.0	166.0	248.0

TABLEA-10 : Values of infiltration air coefficient K . for windows.

Window Type	Infiltration Air Coefficient *K*		
	Average	Minimum	Maximum
Sliding			
Iron	0.36	0.25	0.40
Aluminum	0.43	0.25	0.70
Hung			
Iron	0.25	0.10	0.60
Aluminum (side pivoted)	0.36	0.07	0.70
Aluminum (horizontal pivoted)	0.30	0.07	0.50
PVC	0.10	0.03	0.15

TABLE A-11 : Values of the factor S_1.

№	Topography of Location	Value of S_1
1	Protected locations by hills or buildings (wind speed = 0.5 m/s)	0.9
2	Unprotected locations such as sea shores, hill tops, etc.	1.1
3	Locations other than that listed in item (1) or (2) of this table.	1.0

TABLE A-12 : Values of the factor S_2.

Location Class	Class 1			Class 2			Class 3			Class 4		
Building Height, m	A	B	C	A	B	C	A	B	C	A	B	C
3	0.47	0.52	0.56	0.55	0.60	0.64	0.63	0.67	0.72	0.73	0.78	0.83
5	0.50	0.55	0.60	0.60	0.65	0.70	0.70	0.74	0.79	0.78	0.83	0.88
10	0.58	0.62	0.67	0.69	0.74	0.78	0.83	0.88	0.93	0.90	0.95	1.00
15	0.64	0.69	0.74	0.78	0.83	0.88	0.91	0.95	1.00	0.94	0.99	1.03
20	0.70	0.75	0.79	0.85	0.90	0.95	0.94	0.98	1.03	0.96	1.01	1.06
30	0.79	0.85	0.90	0.92	0.97	1.01	0.98	1.03	1.07	1.00	1.05	1.09
40	0.89	0.93	0.97	0.95	1.00	1.05	1.01	1.06	1.10	1.03	1.08	1.12
50	0.94	0.98	1.02	1.00	1.04	1.08	1.04	1.08	1.12	1.06	1.10	1.14
60	0.98	1.02	1.05	1.02	1.06	1.10	1.06	1.10	1.14	1.08	1.12	1.15
80	1.03	1.07	1.10	1.06	1.10	1.13	1.09	1.13	1.17	1.11	1.15	1.18
100	1.07	1.10	1.13	1.09	1.12	1.16	1.12	1.16	1.19	1.13	1.17	1.20
120	1.10	1.13	1.15	1.11	1.15	1.18	1.14	1.18	1.21	1.15	1.19	1.22
140	1.12	1.15	1.17	1.13	1.17	1.12	1.16	1.19	1.22	1.17	1.20	1.24
160	1.14	1.17	1.19	1.15	1.18	1.21	1.18	1.21	1.24	1.19	1.22	1.25
180	1.16	1.19	1.20	1.17	1.20	1.23	1.19	1.22	1.25	1.20	1.23	1.26
200	1.18	1.21	1.22	1.18	1.21	1.24	1.21	1.24	1.26	1.21	1.24	1.27

Figure 1 : Psychometric Chart

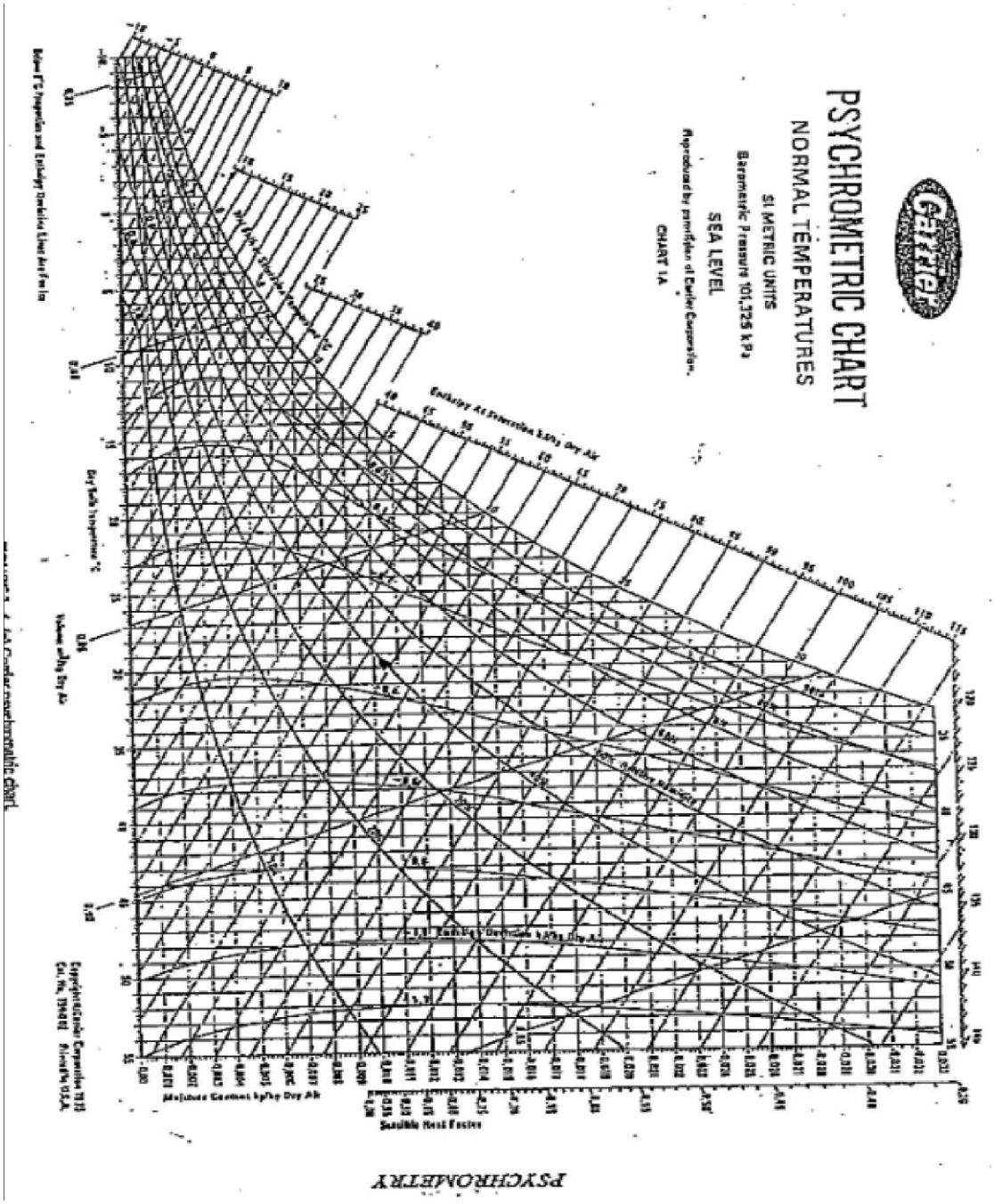

TABLE A-13: Water Supply Fixture Unit and Fixture Branch Sizes.

Table 9.3 Water Supply Fixture Units and Fixture Branch Sizes

Fixture[a]	*Use*	*Type of Supply Control*	*Fixture Units*[b]	*Min. Size of Fixture Branch*[d] *in.*
Bathroom group[c]	Private	Flushometer	8	—
Bathroom group[c]	Private	Flush tank for closet	6	—
Bathtub	Private	Faucet	2	1/2
Bathtub	General	Faucet	4	1/2
Clothes washer	Private	Faucet	2	1/2
Clothes washer	General	Faucet	4	1/2
Combination fixture	Private	Faucet	3	1/2
Dishwasher[f]	Private	Automatic	1	1/2
Drinking fountain	Offices, etc.	Faucet 3/8 in.	0.25	1/2
Kitchen sink	Private	Faucet	2	1/2
Kitchen sink	General	Faucet	4	1/2
Laundry trays (1–3)	Private	Faucet	3	1/2
Lavatory	Private	Faucet	1	3/8
Lavatory	General	Faucet	2	1/2
Separate shower	Private	Mixing valve	2	1/2
Service sink	General	Faucet	3	1/2
Shower head	Private	Mixing valve	2	1/2
Shower head	General	Mixing valve	4	1/2
Urinal	General	Flushometer	5	3/4[e]
Urinal	General	Flush tank	3	1/2
Water closet	Private	Flushometer	6	1
Water closet	Private	Flushometer/tank	3	1/2
Water closet	Private	Flush tank	3	1/2
Water closet	General	Flushometer	10	1
Water closet	General	Flushometer/tank	5	1/2
Water closet	General	Flush tank	5	1/2

Water supply outlets not listed above shall be computed at their maximum demand, but in no case less than the following values:

TABLE A-14 : Table for Estimating Demand.

Table 9.4 Table for Estimating Demand

Supply Systems Predominantly for Flush Tanks		*Supply Systems Predominantly for Flushometers*	
*Load, WSFU**	*Demand, gpm*	*Load, WSFU**	*Demand, gpm*
6	5	—	—
10	8	10	27
15	11	15	31
20	14	20	35
25	17	25	38
30	20	30	41
40	25	40	47
50	29	50	51
60	33	60	55
80	39	80	62
100	44	100	68
120	49	120	74
140	53	140	78
160	57	160	83
180	61	180	87
200	65	200	91
225	70	225	95
250	75	250	100
300	85	300	110
400	105	400	125
500	125	500	140
750	170	750	175
1000	210	1000	218
1250	240	1250	240
1500	270	1500	270
1750	300	1750	300
2000	325	2000	325
2500	380	2500	380
3000	435	3000	435
4000	525	4000	525
5000	600	5000	600
6000	650	6000	650
7000	700	7000	700
8000	730	8000	730
9000	760	9000	760
10,000	790	10,000	790

TABLE A-15 : Minimum Pressure Required by Typical Plumping Fixture.

Table 9.1 Minimum Pressure Required by Typical Plumbing Fixtures

Fixture Type	Minimum Pressure, psi
Sink and tub faucets	8
Shower	8
Water closet—tank flush	8
Flush valve—urinal	15
Flush valve—siphon jet bowl	
floor-mounted	15
wall-mounted	20
Flush valve—blowout bowl	
floor-mounted	20
wall-mounted	25
Garden hose	
5/8-in. sill cock	15
3/4-in. sill cock	30
Drinking fountain	15

Source. *EPA Manual of Individual Water Supply System*, 1975 and manufacturers' data.

Figure 2 : Friction Head Loss for Water in Commercial Steel Pipe.

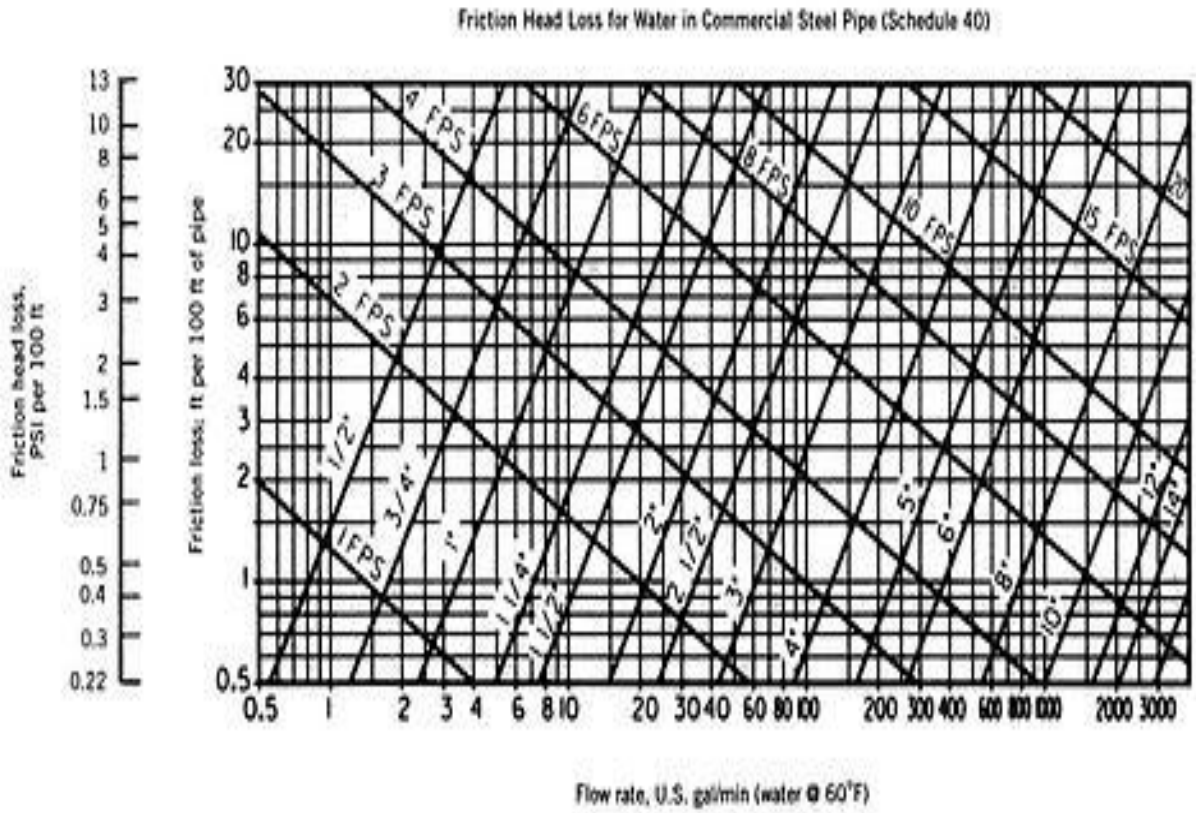

Figure 9.5 Chart of friction head loss in Schedule 40 black iron or steel pipe, for water at 60°F, in feet of water and psi per 100 ft of equivalent pipe length. Pipe sizes are nominal. (Reprinted by permission of the American Society of Heating, Refrigerating and Air-Conditioning Engineers, Atlanta, Georgia, from the 1993 *ASHRAE Handbook—Fundamentals.*)

TABLE A-16 :estimated hot water demand.

Table 9.10 Estimated Hot Water Demand

Building Type	Hot Water[a] per Person, gal/day	Maximum Hourly Demand, Portion of Daily Use, gal	Duration of Peak Load, hr	Storage Capacity, Portion of Daily Use, gal	Heating Capacity Portion of Daily Use, gph
Residences, apartments, hotels[b]	20–40	1/7	4	1/5	1/7
Office buildings	2–3	1/5	2	1/5	1/6
Factory buildings	5	1/3	1	2/5	1/8

[a]at 140°F.

[b]Allow additional 15 gal per dishwasher and 40 gal per domestic clothes washer.

Source. From Ramsey and Sleeper, *Architectural Graphic Standards*, 8th ed., 1989, reprinted by permission of John Wiley & Sons.

TABLE A-17 : capacity of septic tanks.

Table 10.11 Capacity of Septic Tanks[a]

Single Family Dwellings, Number of Bedrooms	Multiple Dwelling Units or Apartments—One Bedroom Each, Number of Units	Other Uses, Maximum Fixture Units Served	Minimum Septic Tank Capacity in gal
1–3		20	1000
4	2	25	1200
5 or 6	3	33	1500
7 or 8	4	45	2000
	5	55	2250
	6	60	2500
	7	70	2750
	8	80	3000
	9	90	3250
	10	100	3500

TABLE A-18 : Tables of indoor unit for VRF system

10 Neo Forte

10-3. Capacity tables

1) Cooling

TC : Total Capacity(kW), SHC : Sensible Heat Capacity(kW)

Model	Outdoor temperature (°C, DB)	Indoor temperature (°C, WB)													
		20 (°C, DB) 14 (°C, WB)		23 (°C, DB) 16 (°C, WB)		26 (°C, DB) 18 (°C, WB)		27 (°C, DB) 19 (°C, WB)		28 (°C, DB) 20 (°C, WB)		30 (°C, DB) 22 (°C, WB)		32 (°C, DB) 24 (°C, WB)	
		TC	SHC	TC	SHC	TC	SHC	TC	SHC	TC	SHC	TC	SHC	TC	SHC
022	10	1.5	1.3	1.8	1.5	2.1	1.5	2.2	1.5	2.3	1.5	2.5	1.6	2.6	1.4
	12	1.5	1.3	1.8	1.5	2.1	1.5	2.2	1.5	2.3	1.5	2.5	1.6	2.6	1.4
	14	1.5	1.3	1.8	1.5	2.1	1.5	2.2	1.5	2.3	1.5	2.5	1.6	2.6	1.4
	16	1.5	1.3	1.8	1.5	2.1	1.5	2.2	1.5	2.3	1.5	2.4	1.5	2.6	1.4
	18	1.5	1.3	1.8	1.5	2.1	1.5	2.2	1.5	2.3	1.5	2.4	1.5	2.6	1.4
	20	1.5	1.3	1.8	1.5	2.1	1.5	2.2	1.5	2.3	1.5	2.4	1.5	2.6	1.4
	21	1.5	1.3	1.8	1.5	2.1	1.5	2.2	1.5	2.3	1.5	2.4	1.5	2.6	1.4
	23	1.5	1.3	1.8	1.5	2.1	1.5	2.2	1.5	2.3	1.5	2.4	1.5	2.6	1.4
	25	1.5	1.3	1.8	1.5	2.1	1.5	2.2	1.5	2.3	1.5	2.4	1.5	2.6	1.4
	27	1.5	1.3	1.8	1.5	2.1	1.5	2.2	1.5	2.3	1.5	2.4	1.5	2.6	1.4
	29	1.5	1.3	1.8	1.5	2.1	1.5	2.2	1.5	2.3	1.5	2.4	1.5	2.6	1.4
	31	1.5	1.3	1.8	1.5	2.1	1.5	2.2	1.5	2.3	1.5	2.4	1.5	2.6	1.4
	33	1.5	1.3	1.8	1.5	2.1	1.5	2.2	1.5	2.3	1.5	2.4	1.5	2.6	1.4
	35	1.5	1.3	1.8	1.5	2.1	1.5	2.2	1.5	2.3	1.5	2.4	1.5	2.6	1.4
	37	1.5	1.3	1.8	1.5	2.1	1.5	2.2	1.5	2.3	1.5	2.4	1.5	2.6	1.4
	39	1.5	1.3	1.8	1.5	2.1	1.5	2.2	1.5	2.3	1.5	2.4	1.5	2.5	1.3
	42	1.5	1.3	1.8	1.5	2.1	1.5	2.1	1.4	2.2	1.7	2.3	1.4	2.4	1.2
	44	1.5	1.3	1.8	1.5	2.0	1.4	2.1	1.4	2.1	1.6	2.2	1.3	2.2	1.1
028	10	1.9	1.6	2.3	1.8	2.6	2.0	2.8	1.9	2.9	1.9	3.1	1.9	3.4	1.9
	12	1.9	1.6	2.3	1.8	2.6	2.0	2.8	1.9	2.9	1.9	3.1	1.9	3.3	1.8
	14	1.9	1.6	2.3	1.8	2.6	2.0	2.8	1.9	2.9	1.9	3.1	1.9	3.3	1.8
	16	1.9	1.6	2.3	1.8	2.6	2.0	2.8	1.9	2.9	1.9	3.1	1.9	3.3	1.8
	18	1.9	1.6	2.3	1.8	2.6	2.0	2.8	1.9	2.9	1.9	3.1	1.9	3.3	1.8
	20	1.9	1.6	2.3	1.8	2.6	2.0	2.8	1.9	2.9	1.9	3.1	1.9	3.3	1.8
	21	1.9	1.6	2.3	1.8	2.6	2.0	2.8	1.9	2.9	1.9	3.1	1.9	3.3	1.8
	23	1.9	1.6	2.3	1.8	2.6	2.0	2.8	1.9	2.9	1.9	3.1	1.9	3.3	1.8
	25	1.9	1.6	2.3	1.8	2.6	2.0	2.8	1.9	2.9	1.9	3.1	1.9	3.3	1.8
	27	1.9	1.6	2.3	1.8	2.6	2.0	2.8	1.9	2.9	1.9	3.1	1.9	3.3	1.8
	29	1.9	1.6	2.3	1.8	2.6	2.0	2.8	1.9	2.9	1.9	3.1	1.9	3.3	1.8
	31	1.9	1.6	2.3	1.8	2.6	2.0	2.8	1.9	2.9	1.9	3.1	1.9	3.3	1.8
	33	1.9	1.6	2.3	1.8	2.6	2.0	2.8	1.9	2.9	1.9	3.1	1.9	3.3	1.8
	35	1.9	1.6	2.3	1.8	2.6	2.0	2.8	1.9	2.9	1.9	3.1	1.9	3.3	1.8
	37	1.9	1.6	2.3	1.8	2.6	2.0	2.8	1.9	2.9	1.9	3.1	1.9	3.3	1.8
	39	1.9	1.6	2.3	1.8	2.6	2.0	2.8	1.9	2.9	1.9	3.0	1.8	3.2	1.7
	42	1.9	1.6	2.3	1.8	2.6	2.0	2.7	1.8	2.8	1.8	2.9	1.7	3.0	1.6
	44	1.9	1.6	2.3	1.8	2.5	1.9	2.7	1.8	2.7	1.7	2.7	1.6	2.8	1.5
036	10	2.5	2.1	2.9	2.2	3.4	2.3	3.6	2.4	3.7	2.4	4.0	2.4	4.3	2.3
	12	2.5	2.1	2.9	2.2	3.4	2.3	3.6	2.4	3.7	2.4	4.0	2.4	4.3	2.3
	14	2.5	2.1	2.9	2.2	3.4	2.3	3.6	2.4	3.7	2.4	4.0	2.4	4.3	2.3
	16	2.5	2.1	2.9	2.2	3.4	2.3	3.6	2.4	3.7	2.4	4.0	2.4	4.3	2.3
	18	2.5	2.1	2.9	2.2	3.4	2.3	3.6	2.4	3.7	2.4	4.0	2.4	4.3	2.3
	20	2.5	2.1	2.9	2.2	3.4	2.3	3.6	2.4	3.7	2.4	4.0	2.4	4.2	2.3
	21	2.5	2.1	2.9	2.2	3.4	2.3	3.6	2.4	3.7	2.4	4.0	2.4	4.2	2.3
	23	2.5	2.1	2.9	2.2	3.4	2.3	3.6	2.4	3.7	2.4	4.0	2.4	4.2	2.3
	25	2.5	2.1	2.9	2.2	3.4	2.3	3.6	2.4	3.7	2.4	4.0	2.4	4.2	2.3
	27	2.5	2.1	2.9	2.2	3.4	2.3	3.6	2.4	3.7	2.4	4.0	2.4	4.2	2.3
	29	2.5	2.1	2.9	2.2	3.4	2.3	3.6	2.4	3.7	2.4	4.0	2.4	4.2	2.3
	31	2.5	2.1	2.9	2.2	3.4	2.3	3.6	2.4	3.7	2.4	4.0	2.4	4.2	2.3
	33	2.5	2.1	2.9	2.2	3.4	2.3	3.6	2.4	3.7	2.4	4.0	2.4	4.2	2.3
	35	2.5	2.1	2.9	2.2	3.4	2.3	3.6	2.4	3.7	2.4	4.0	2.4	4.2	2.3
	37	2.5	2.1	2.9	2.2	3.4	2.3	3.6	2.4	3.7	2.4	3.9	2.3	4.2	2.3
	39	2.5	2.1	2.9	2.2	3.4	2.3	3.6	2.4	3.7	2.4	3.9	2.3	4.1	2.2
	42	2.5	2.1	2.9	2.2	3.4	2.3	3.5	2.3	3.6	2.3	3.7	2.2	3.9	2.1
	44	2.5	2.1	2.9	2.2	3.2	2.2	3.4	2.2	3.5	2.2	3.5	2.1	3.6	1.9
056	10	3.9	3.0	4.6	3.4	5.3	3.7	5.6	3.8	5.8	3.8	6.3	3.9	6.7	3.6
	12	3.9	3.0	4.6	3.4	5.3	3.7	5.6	3.8	5.8	3.8	6.3	3.9	6.7	3.6
	14	3.9	3.0	4.6	3.4	5.3	3.7	5.6	3.8	5.8	3.8	6.2	3.8	6.7	3.6
	16	3.9	3.0	4.6	3.4	5.3	3.7	5.6	3.8	5.8	3.8	6.2	3.8	6.6	3.5
	18	3.9	3.0	4.6	3.4	5.3	3.7	5.6	3.8	5.8	3.8	6.2	3.8	6.6	3.5
	20	3.9	3.0	4.6	3.4	5.3	3.7	5.6	3.8	5.8	3.8	6.2	3.8	6.6	3.5
	21	3.9	3.0	4.6	3.4	5.3	3.7	5.6	3.8	5.8	3.8	6.2	3.8	6.6	3.5
	23	3.9	3.0	4.6	3.4	5.3	3.7	5.6	3.8	5.8	3.8	6.2	3.8	6.6	3.5
	25	3.9	3.0	4.6	3.4	5.3	3.7	5.6	3.8	5.8	3.8	6.2	3.8	6.6	3.5
	27	3.9	3.0	4.6	3.4	5.3	3.7	5.6	3.8	5.8	3.8	6.2	3.8	6.6	3.5
	29	3.9	3.0	4.6	3.4	5.3	3.7	5.6	3.8	5.8	3.8	6.2	3.8	6.6	3.5
	31	3.9	3.0	4.6	3.4	5.3	3.7	5.6	3.8	5.8	3.8	6.2	3.8	6.6	3.5
	33	3.9	3.0	4.6	3.4	5.3	3.7	5.6	3.8	5.8	3.8	6.2	3.8	6.6	3.5
	35	3.9	3.0	4.6	3.4	5.3	3.7	5.6	3.8	5.8	3.8	6.2	3.8	6.6	3.5

2) Heating

TC : Total Capacity(kW)

Model	Outdoor temperature (°C)		Indoor temperature (°C, DB)				
			16.0	18.0	20.0	22.0	24.0
			TC	TC	TC	TC	TC
	DB	WB	kW	kW	kW	kW	kW
022	-20	-21	1.5	1.5	1.5	1.5	1.5
	-17	-18	1.6	1.6	1.6	1.6	1.6
	-15	-16	1.7	1.6	1.6	1.6	1.6
	-12	-13	1.8	1.8	1.8	1.8	1.7
	-10	-11	2.0	2.0	1.9	1.9	1.9
	-7	-8	2.3	2.2	2.2	2.0	2.0
	-5	-6	2.4	2.3	2.3	2.2	2.2
	-3	-4	2.5	2.5	2.4	2.3	2.2
	0	-1	2.6	2.5	2.5	2.3	2.2
	3	2.2	2.7	2.6	2.5	2.3	2.2
	5	4.1	2.8	2.7	2.5	2.3	2.2
	7	6	2.8	2.7	2.5	2.3	2.2
	9	7.9	3.0	2.7	2.5	2.3	2.2
	11	9.8	3.0	2.7	2.5	2.3	2.2
	13	12	3.0	2.7	2.5	2.3	2.2
	15	14	3.0	2.7	2.5	2.3	2.2
028	-20	-21	1.9	1.9	1.9	1.9	1.9
	-17	-18	2.0	2.0	2.0	2.0	1.9
	-15	-16	2.1	2.1	2.0	2.0	1.9
	-12	-13	2.2	2.2	2.2	2.1	2.1
	-10	-11	2.3	2.3	2.3	2.3	2.2
	-7	-8	2.5	2.4	2.4	2.4	2.3
	-5	-6	2.6	2.6	2.5	2.5	2.4
	-3	-4	2.8	2.7	2.7	2.6	2.5
	0	-1	2.9	2.8	2.8	2.7	2.6
	3	2.2	3.0	3.0	2.9	2.8	2.7
	5	4.1	3.2	3.1	3.1	2.9	2.7
	7	6	3.3	3.2	3.2	3.0	2.7
	9	7.9	3.4	3.3	3.2	3.0	2.7
	11	9.8	3.5	3.3	3.2	3.0	2.7
	13	12	3.6	3.4	3.2	3.0	2.7
	15	14	3.7	3.4	3.2	3.0	2.7
036	-20	-21	2.4	2.4	2.3	2.3	2.3
	-17	-18	2.6	2.5	2.4	2.4	2.3
	-15	-16	2.7	2.6	2.5	2.5	2.4
	-12	-13	2.8	2.7	2.7	2.6	2.6
	-10	-11	2.9	2.9	2.9	2.8	2.8
	-7	-8	3.1	3.1	3.0	3.0	2.9
	-5	-6	3.3	3.2	3.2	3.1	3.0
	-3	-4	3.4	3.4	3.3	3.2	3.1
	0	-1	3.6	3.6	3.5	3.4	3.2
	3	2.2	3.8	3.7	3.7	3.5	3.4
	5	4.1	3.9	3.9	3.8	3.6	3.4
	7	6	4.1	4.1	4.0	3.7	3.4
	9	7.9	4.2	4.1	4.0	3.7	3.4
	11	9.8	4.4	4.2	4.0	3.7	3.4
	13	12	4.5	4.2	4.0	3.7	3.4
	15	14	4.6	4.3	4.0	3.7	3.4
056	-20	-21	3.9	3.8	3.8	3.7	3.7
	-17	-18	4.0	4.0	3.9	3.8	3.8
	-15	-16	4.2	4.1	4.0	3.9	3.8
	-12	-13	4.4	4.3	4.2	4.2	4.1
	-10	-11	4.6	4.6	4.5	4.4	4.4
	-7	-8	4.9	4.8	4.8	4.7	4.5
	-5	-6	5.2	5.1	5.0	4.9	4.7
	-3	-4	5.4	5.3	5.3	5.1	4.9
	0	-1	5.7	5.6	5.5	5.3	5.0
	3	2.2	5.9	5.9	5.8	5.6	5.3
	5	4.1	6.2	6.1	6.0	5.7	5.3
	7	6	6.5	6.4	6.3	5.8	5.3
	9	7.9	6.7	6.5	6.3	5.8	5.3
	11	9.8	6.9	6.6	6.3	5.8	5.3
	13	12	7.1	6.7	6.3	5.8	5.3

TABLE A-19 : Table of outdoor unit for VRF system

(2) Compact combinations

Type																					
Model	Compact Combinations			18 HP						20 HP						22 HP					
	Basic		RVXVHT080GE	1																	
			RVXVHT100GE	1						2						1					
			RVXVHT120GE													1					
			RVXVHT140GE																		
			RVXVHT160GE																		
Power Supply			ø/V/Hz	3/380~415/50						3/380~415/50						3/380~415/50					
Mode*1)			-	HP						HP						HP					
Performance	Horse Power		HP	18						20						22					
	Capacity	Cooling*2)	kW	50.4						56.0						61.6					
			Btu/h	171,900						191,000						210,100					
		Heating*3)	kW	56.7						63.0						69.3					
			Btu/h	193,500						215,000						236,500					
Power	Nominal input	Cooling	kW	13.54						15.56						18.18					
		Heating	kW	12.67						14.32						16.56					
	Nominal running current	Cooling	A	26.1						27.8						34.9					
		Heating	A	25.0						26.0						32.2					
	Circuit Breaker (MCCB/ELB)		A	50						60						60					
COP	Cooling		-	3.72						3.60						3.39					
	Heating		-	4.48						4.40						4.18					
Compressor	Model		-	ZRU61*	ZRU72*	ZRU83*	ZPB61*	ZPB72*	ZPB83*	ZRU61*	ZRU72*	ZRU83*	ZPB61*	ZPB72*	ZPB83*	ZRU61*	ZRU72*	ZRU83*	ZPB61*	ZPB72*	ZPB83*
	Type		-	Digital scroll			Fixed scroll			Digital scroll			Fixed scroll			Digital scroll			Fixed scroll		
	Number		EA	2			2			2			2			1		1	1		1
	Piston Displacement		cc/Rev	58.1			58.1			58.1			58.1			58.1		77.2	58.1		77.2
	Output		kW	4.93			4.93			4.93			4.93			4.93		8.02	4.93		8.02
	Lubricant	Type	-	3MAF POE						3MAF POE						3MAF POE					
		Charging	cc	1,800			1,800			1,800			1,800			1,800		1,800	1,800		1,800
Fan	Type/Control		-	Propeller/BLDC						Propeller/BLDC						Propeller/BLDC					
	Motor Output		W																		
	Airflow Rate		m³/min	170 x 2						170 x 2						170 x 1 + 180 x 1					
	External Static Pressure	Max.	mmAq	8						8						8					
			Pa	78.5						78.5						78.5					
Safety Devices	Mechanical Type		-	High pressure switch						High pressure switch						High pressure switch					
			-	Crank Case Heater						Crank Case Heater						Crank Case Heater					
			-	Fuse for PCB						Fuse for PCB						Fuse for PCB					
	Electronic Type		-	Over voltage protection						Over voltage protection						Over voltage protection					
			-	Current Transformer						Current Transformer						Current Transformer					
			-	Fan over heat/current protector						Fan over heat/current protector						Fan over heat/current protector					
Piping Connections	Liquid		ø, mm	15.88						15.88						15.88					
	Gas		ø, mm	28.58						28.58						28.58					
	Oil (Flare)		ø, mm	6.35						6.35						6.35					
	Installation Limitation	Max. Length	m	200						200						200					
		Max. Height	m	50 (40)						50 (40)						50 (40)					
Refrigerant	Type		-	R410A						R410A						R410A					
	Factory Charging		kg	7.5 x 2						7.5 x 2						7.5 x 2					

TABLE A-20 :capacity tables of outdoor unit for VRF system

1-2. Capacity tables

2) Compact combinations

(1) 18HP(Heat Pump / Heat Recovery) ***Cooling***

TC : Total Capacity, PI : Power Input

Combination% (Capacity index)	Outdoor temperature(°C)	Indoor temperature (°C, WB)													
		14 (°C, WB)		16 (°C, WB)		18 (°C, WB)		19 (°C, WB)		20 (°C, WB)		22 (°C, WB)		24 (°C, WB)	
		TC	PI	TC	PI	TC	PI	TC	PI	TC	PI	TC	PI	TC	PI
		kW	kW	kW	kW	kW	kW	kW	kW	kW	kW	kW	kW	kW	kW
130	10	38.29	5.65	45.19	7.08	52.10	8.58	55.55	9.21	57.77	9.35	62.22	9.69	66.66	10.00
	12	38.29	5.83	45.19	7.30	52.10	8.84	55.55	9.49	57.72	9.62	62.07	9.95	66.42	10.24
	14	38.29	6.03	45.19	7.54	52.10	9.12	55.55	9.78	57.68	9.90	61.93	10.21	66.18	10.50
	16	38.29	6.24	45.19	7.79	52.10	9.41	55.55	10.09	57.63	10.20	61.79	10.50	65.95	10.77
	18	38.29	6.46	45.19	8.06	52.10	9.73	55.55	10.42	57.58	10.52	61.64	10.80	65.71	11.05
	20	38.29	6.70	45.19	8.35	52.10	10.06	55.55	10.77	57.53	10.87	61.50	11.12	65.47	11.35
	21	38.29	6.83	45.19	8.50	52.10	10.24	55.55	10.96	57.53	11.05	61.50	11.30	65.47	11.53
	23	38.29	7.10	45.19	8.82	52.10	10.61	55.55	11.35	57.53	11.44	61.50	11.69	65.47	11.91
	25	38.29	7.39	45.19	9.17	52.10	11.01	55.55	11.77	57.53	11.85	61.50	12.09	65.47	12.31
	27	38.29	7.71	45.19	9.54	52.10	11.44	55.55	12.22	57.53	12.30	61.50	12.53	65.47	12.74
	29	38.29	8.05	45.19	9.95	52.10	11.90	55.55	12.71	57.53	12.78	61.50	13.00	65.47	13.20
	31	38.29	8.43	45.19	10.39	52.10	12.41	55.55	13.24	57.53	13.30	61.50	13.51	65.47	13.69
	33	38.29	8.84	45.19	10.88	52.10	12.96	55.55	13.82	57.53	13.87	61.50	14.06	65.47	14.23
	35	38.29	9.30	45.19	11.41	52.10	13.56	55.55	14.44	57.53	14.48	61.50	14.66	65.47	14.80
	37	38.29	9.81	45.19	12.00	52.10	14.22	55.55	15.13	57.34	15.10	60.91	15.16	64.48	15.20
	39	38.29	10.37	45.19	12.65	52.10	14.95	55.55	15.89	57.06	15.76	60.07	15.64	63.09	15.53
	42	38.29	11.36	45.19	13.76	52.10	16.19	53.96	16.69	55.07	16.41	57.30	16.03	59.52	15.68
	44	38.29	12.12	45.19	14.63	49.60	16.32	52.77	17.25	53.33	16.77	54.44	16.03	55.55	15.37
120	10	37.25	5.55	43.96	6.96	50.68	8.44	54.04	9.05	56.20	9.19	60.52	9.53	64.84	9.83
	12	37.25	5.73	43.96	7.18	50.68	8.69	54.04	9.32	56.15	9.45	60.38	9.77	64.61	10.07
	14	37.25	5.92	43.96	7.41	50.68	8.96	54.04	9.61	56.10	9.73	60.24	10.04	64.38	10.32
	16	37.25	6.13	43.96	7.66	50.68	9.25	54.04	9.91	56.06	10.03	60.10	10.32	64.15	10.58
	18	37.25	6.35	43.96	7.92	50.68	9.56	54.04	10.24	56.01	10.34	59.96	10.61	63.92	10.86
	20	37.25	6.59	43.96	8.21	50.68	9.89	54.04	10.59	55.96	10.68	59.82	10.93	63.68	11.16
	21	37.25	6.71	43.96	8.35	50.68	10.06	54.04	10.77	55.96	10.86	59.82	11.11	63.68	11.33
	23	37.25	6.98	43.96	8.67	50.68	10.43	54.04	11.15	55.96	11.24	59.82	11.48	63.68	11.70
	25	37.25	7.26	43.96	9.01	50.68	10.82	54.04	11.57	55.96	11.65	59.82	11.89	63.68	12.10
	27	37.25	7.57	43.96	9.38	50.68	11.24	54.04	12.01	55.96	12.09	59.82	12.32	63.68	12.52
	29	37.25	7.91	43.96	9.78	50.68	11.70	54.04	12.49	55.96	12.56	59.82	12.78	63.68	12.97
	31	37.25	8.28	43.96	10.21	50.68	12.20	54.04	13.01	55.96	13.07	59.82	13.28	63.68	13.46
	33	37.25	8.69	43.96	10.69	50.68	12.74	54.04	13.58	55.96	13.63	59.82	13.82	63.68	13.98
	35	37.25	9.14	43.96	11.21	50.68	13.33	54.04	14.19	55.96	14.23	59.82	14.40	63.68	14.55
	37	37.25	9.64	43.96	11.79	50.68	13.98	54.04	14.87	55.77	14.84	59.25	14.90	62.72	14.93
	39	37.25	10.19	43.96	12.43	50.68	14.69	54.04	15.61	55.50	15.49	58.43	15.37	61.37	15.26
	42	37.25	11.16	43.96	13.53	50.68	15.91	52.49	16.40	53.57	16.13	55.73	15.76	57.89	15.41
	44	37.25	11.91	43.96	14.37	48.25	16.04	51.33	16.95	51.87	16.48	52.95	15.76	54.04	15.10
110	10	36.20	5.45	42.73	6.83	49.26	8.28	52.52	8.89	54.62	9.03	58.82	9.35	63.02	9.65
	12	36.20	5.63	42.73	7.05	49.26	8.53	52.52	9.15	54.58	9.28	58.69	9.60	62.80	9.88
	14	36.20	5.82	42.73	7.28	49.26	8.80	52.52	9.43	54.53	9.56	58.55	9.86	62.57	10.13
	16	36.20	6.02	42.73	7.52	49.26	9.08	52.52	9.73	54.49	9.85	58.42	10.13	62.35	10.39
	18	36.20	6.23	42.73	7.78	49.26	9.38	52.52	10.05	54.44	10.16	58.28	10.42	62.12	10.66
	20	36.20	6.47	42.73	8.06	49.26	9.71	52.52	10.39	54.40	10.48	58.15	10.73	61.90	10.95
	21	36.20	6.59	42.73	8.20	49.26	9.88	52.52	10.57	54.40	10.66	58.15	10.91	61.90	11.13
	23	36.20	6.85	42.73	8.51	49.26	10.24	52.52	10.95	54.40	11.04	58.15	11.28	61.90	11.49
	25	36.20	7.13	42.73	8.85	49.26	10.62	52.52	11.36	54.40	11.44	58.15	11.67	61.90	11.88
	27	36.20	7.44	42.73	9.21	49.26	11.04	52.52	11.79	54.40	11.87	58.15	12.09	61.90	12.29
	29	36.20	7.77	42.73	9.60	49.26	11.49	52.52	12.26	54.40	12.33	58.15	12.55	61.90	12.74
	31	36.20	8.13	42.73	10.03	49.26	11.98	52.52	12.78	54.40	12.84	58.15	13.04	61.90	13.21

1-2. Capacity tables

2) Compact combinations

(1) 18HP(Heat Pump / Heat Recovery) ***Heating***

TC : Total Capacity, PI : Power Input

Combination% (Capacity index)	Outdoor temperature (°C)		Indoor temperature (°C, DB)									
			16.0 °C		18.0 °C		20.0 °C		22.0 °C		24.0 °C	
			TC	PI	TC	PI	TC	PI	TC	PI	TC	PI
	DB	WB	kW	kW	kW	kW	kW	kW	kW	kW	kW	kW
130	-20	-21	37.53	10.97	36.83	11.49	36.64	11.96	36.64	12.44	36.45	12.91
	-17	-18	39.32	11.40	38.77	11.90	38.58	12.36	38.58	12.83	38.39	13.30
	-15	-16	41.12	11.85	40.74	12.32	40.54	12.77	40.54	13.23	40.35	13.68
	-12	-13	43.08	12.32	42.89	12.76	42.69	13.20	42.69	13.65	42.50	14.09
	-10	-11	45.06	12.79	45.06	13.21	44.86	13.64	44.86	14.07	44.67	14.50
	-7	-8	47.68	13.26	47.48	13.68	47.48	14.08	47.28	14.50	47.28	14.90
	-5	-6	52.14	13.99	52.14	14.38	51.94	14.75	51.94	15.14	48.81	15.52
	-3	-4	55.47	14.47	55.27	14.83	55.27	15.20	53.85	15.56	50.36	15.68
	0	-1	58.65	14.92	58.65	15.27	57.22	15.63	55.00	15.72	50.85	15.06
	3	2.2	63.93	15.54	61.30	15.61	59.07	15.94	56.16	15.04	51.33	13.79
	5	4.1	66.44	16.16	64.00	15.18	60.95	14.07	56.69	13.00	51.81	11.95
	7	6	67.06	15.47	64.60	14.39	61.52	13.35	57.21	12.35	52.29	11.36
	9	7.9	67.67	14.66	65.19	13.66	62.09	12.68	57.74	11.74	52.77	10.81
	11	9.8	68.29	13.92	65.79	12.98	62.65	12.07	58.27	11.17	53.26	10.30
	13	12	68.91	13.18	66.38	12.31	63.22	11.46	58.80	10.62	53.74	9.80
	15	14	69.53	12.54	66.98	11.71	63.79	10.90	59.32	10.12	54.22	9.36
120	-20	-21	37.53	11.08	36.83	11.61	36.64	12.09	36.64	12.57	36.45	13.05
	-17	-18	39.32	11.50	38.77	12.00	38.58	12.47	38.58	12.94	38.39	13.41
	-15	-16	41.12	11.92	40.74	12.39	40.54	12.85	40.54	13.31	40.35	13.77
	-12	-13	43.08	12.37	42.89	12.81	42.69	13.26	42.69	13.70	42.50	14.15
	-10	-11	45.06	12.82	45.06	13.23	44.86	13.67	44.86	14.10	44.67	14.53
	-7	-8	47.59	13.26	47.39	13.68	47.39	14.08	47.19	14.50	47.19	14.90
	-5	-6	51.94	13.96	51.94	14.35	51.74	14.72	51.74	15.11	48.62	15.49
	-3	-4	55.15	14.41	54.95	14.77	54.95	15.14	53.54	15.50	50.07	15.62
	0	-1	58.20	14.84	58.20	15.18	56.79	15.54	54.58	15.62	50.46	14.97
	3	2.2	63.33	15.42	60.73	15.49	58.52	15.82	55.63	14.92	50.85	13.68
	5	4.1	65.70	16.01	63.29	15.04	60.27	13.93	56.05	12.88	51.23	11.84
	7	6	66.19	15.29	63.76	14.23	60.73	13.20	56.47	12.21	51.62	11.23
	9	7.9	66.69	14.46	64.24	13.48	61.18	12.51	56.90	11.58	52.00	10.67
	11	9.8	67.18	13.71	64.71	12.79	61.63	11.89	57.32	11.00	52.39	10.15
	13	12	67.67	12.96	65.19	12.10	62.09	11.26	57.74	10.44	52.77	9.64
	15	14	68.17	12.31	65.67	11.50	62.54	10.70	58.16	9.93	53.16	9.19
110	-20	-21	37.53	11.19	36.83	11.72	36.64	12.21	36.64	12.69	36.45	13.18
	-17	-18	39.32	11.59	38.77	12.10	38.58	12.57	38.58	13.04	38.39	13.52
	-15	-16	41.12	11.99	40.74	12.47	40.54	12.93	40.54	13.39	40.35	13.85
	-12	-13	43.08	12.42	42.89	12.86	42.69	13.31	42.69	13.76	42.50	14.20
	-10	-11	45.06	12.85	45.06	13.26	44.86	13.69	44.86	14.13	44.67	14.56
	-7	-8	47.45	13.26	47.25	13.68	47.25	14.08	47.05	14.50	47.05	14.90
	-5	-6	51.64	13.93	51.64	14.32	51.44	14.69	51.44	15.08	48.34	15.46
	-3	-4	54.67	14.36	54.47	14.71	54.47	15.08	53.08	15.44	49.64	15.56
	0	-1	57.53	14.75	57.53	15.09	56.13	15.45	53.96	15.53	49.88	14.88
	3	2.2	62.43	15.30	59.86	15.37	57.69	15.69	54.84	14.80	50.12	13.58
	5	4.1	64.58	15.85	62.21	14.89	59.25	13.80	55.10	12.75	50.36	11.72

TABLE A-21 : Tables of pipe sizing for VRF system

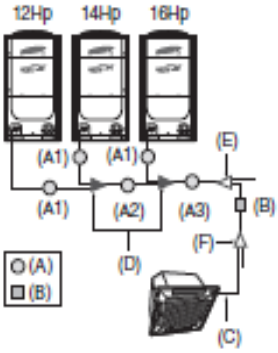

※ Example) 42HP of compact combinations

HP	Mark	Pipe size(O.D.mm)	
		Liquid	Gas
12 HP	(A1)	ø12.70	ø25.40
14 HP	(A1)	ø12.70	ø25.40
16 HP	(A1)	ø12.70	ø28.58
26 HP	(A2)	ø19.05	ø31.75
42 HP	(A3)	ø19.05	ø38.10

Outdoor unit connection pipe size : (A1), (A2), (A3)

A1 : Select the pipes according to the outdoor unit capacity with following table.
A2 : Select the pipes according to sum of outdoor unit capacities behind the outdoor joint with following table.
A3 : Select the main pipe of outdoor units with the following table.

Outdoor unit	Pipe size (O.D. mm)		Oil balancing pipe size
	Liquid	Gas	
8HP	ø9.52	ø19.05	ø6.35
10HP		ø22.23	
12HP	ø12.70	ø25.40	
14HP			
16HP		ø28.58	
18HP	ø15.88		
20HP			
22HP			
24HP			
26~30HP	ø19.05	ø31.75	
32~34HP			
36~48HP		ø38.10	
50~64HP	ø22.23	ø44.45	

*A1 : Pipes to the outdoor unit (Liquid, Gas)
*A2 : Pipes between outdoor joint kits (Liquid, Gas)
*A3 : Main pipes (Liquid, Gas)

Pipe size between branch joints : (B)

Select the pipe size according to the capacity sum of indoor units which are connected below this pipe.

Total Indoor unit's capacity	Pipe size (O. D. mm)	
	Liquid pipe	Gas pipe
15.0 kW and below	ø9.52	ø15.88
Over 15.0~23.2 kW and below		ø19.05
Over 23.2~29.0 kW and below		ø22.23
Over 29.0~40.6 kW and below	ø12.70	ø25.40
Over 40.6~46.4 kW and below		ø28.58
Over 46.4~69.6 kW and below	ø15.88	
Over 69.6~98.6 kW and below	ø19.05	ø31.75
Over 98.6~139.2 kW and below		ø38.10
Over 139.2 kW	ø22.23	ø44.45

Pipe size between branch joints and indoor unit (C)

Select the pipe size according to the indoor's capacity.

Indoor unit's capacity	Pipe size (O.D. mm)	
	Liquid pipe	Gas pipe
2.2~5.6 kW	ø6.35	ø12.70
7.1~14.0 kW	ø9.52	ø15.88

Branch joint : (D), (E), (F)

■ Branch joint of outdoor unit's multi connection (D)

	Model	Capacity of outdoor
Outdoor multi connection branch joint (D)	MXJ-T3819K	Below 48 HP
	MXJ-T4422K	Above 50 HP

■ First branch joint (E)

Select branch joint according to the outdoor unit's capacity

	Outdoor unit	Model
Y-joint (E)	8, 10, 12, 14 HP	MXJ-YA2512K
	16 HP	MXJ-YA2812K
	18, 20, 22, 24HP	MXJ-YA2815K
	26, 28, 30, 32, 34HP	MXJ-YA3119K
	36, 28, 40, 42, 44, 46, 48HP	MXJ-YA3819K
	50HP~	MXJ-YA4422K

■ Branch joint (F)

Select the pipe size according to the capacity sum of indoor units which are connected below this pipe.

1) Y-joint

	Model	Total indoor unit' capacity
Y-joint (F)	MXJ-YA1509K	15.0 kW and below
	MXJ-YA2512K	Over 15.0~40.6 kW and below
	MXJ-YA2812K	Over 40.6~46.4 kW and below
	MXJ-YA2815K	Over 46.4~69.6 kW and below
	MXJ-YA3119K	Over 69.6~98.6 kW and below
	MXJ-YA3819K	Over 98.6~139.2 kW and below
	MXJ-YA4422K	Over 139.2 kW

2) Header joint

	Model	Total Indoor unit's capacity	The connectable quantity of indoor units
Header joint (F)	MXJ-HA2512K	46.4 kW and below	4
	MXJ-HA3115K	Over 46.4kW ~ 69.6 kW	8
	MXJ-HA3819K	Over 69.6 kW	8

Appendix-B

Bill No. (1): MECHANICAL WORKS

Item No.	Description	Unit	Qty.	Unit Rate	Amount
1.0	**<u>MECHANICAL WORKS</u>** **<u>Preamble</u>** *-This Section shall be read in conjunction with the general, particular Mechanical technical specifications, Mechanical Drawings and invitation to bid conditions. *-The unit price for all items in this section shall include for supply, installation, connecting, testing, and commissioning, unless otherwise specifically mentioned or instructed by the Engineer. *-All Civil and Finishing Works related to the concerned item shall be included in the unit price. *-Preparing of coordinated shop drawings and submitting for engineer approval, coordination with other activities, material storage, removing away from site the remnant of electrical works and handing over the Mechanical works to Mechanical works to the authorized Engineer.				

Bill No. (1): MECHANICAL WORKS

Item No.	Description	Unit	Qty.	Unit Rate	Amount
1.1	**<u>Air Conditioning VRF System</u>** Supply and installation testing and commissioning of the following spilt unit, ceiling mounted cassette and wall mounted type indoor unit, complete with electrical connections, insulated PVC drained pipe, indoor/ outdoor hanging supports and insulated copper pipes with necessary accessories. As per drawings and related codes.				
A.	7500 BTU/H (wall mounted type)	No.	28		
B.	9500 BTU/H (cassette type)	No.	19		
1.1.2	**<u>VRF Outdoor Unit</u>** Variable refrigerant flow outdoor unit, scroll compressor with invertors drive, refrigerant R 410 A, Outdoor design conditions 24C summer indoor temperature,30C summer outdoor temperature , 12HP.	No.	3		
1.2	**<u>Ventilation</u>**				
1.2.1	**<u>Exhaust Fans</u>** Supply, install, and connect, testing and commissioning of, wall mounted exhaust fans with gravity shutter driven. Price shall include all required electrical connections as per specifications, drawings and related codes. 100 CFM tube fan wall mounted	No.	29		

Bill No. (1): MECHANICAL WORKS

Item No.	Description	Unit	Qty.	Unit Rate	Amount
1.2	**Water Supply**				
1.2.1	**Water Supply Pump Set** **Water Pump** Supply, install, test and commission water pump for gray water system with cast iron body and stainless steel impeller Grundfos factory assembly or E.A. The rate shall include bolts, nuts, concrete slab, foot valve, ball valves, electrical float, check valve and any accessories needed in the suction and discharge line to connect with the network as shown in pump details. Flow rate 3.5 m3/h, Head 30 m	No	1		
1.2.2	**Galvanized Steel Pipes & Fittings** Supply, install, test and commission galvanized steel pipe work to ASTM-A53 grade "A", schedule (40) for the domestic hot and cold water supply pipe work up to the water outlet. The unit price shall include valves, expansion joints, pressure regulators, air vents, fittings and all accessories and works required to complete the work as shown on drawings, specifications and P.M. instructions.				
A.	Diameter 1 ¼”	ML	174		

Bill No. (1): MECHANICAL WORKS

Item No.	Description	Unit	Qty.	Unit Rate	Amount
1.2.3	**Cross-Linked Polyethylene (PEX) Distribution Pipes** Supply, install, test and commission Cross-linked polyethylene (PEX) pipes to DIN 16892/3, 20 bar working pressure, for cold and hot water distribution from metal water pipes to sanitary fixtures, complete with sleeves and service valve for each connection. The unit price shall include rubber ring seal, brass elbow/adapter inside PVC termination box built in wall for connection with the sanitary fixtures, dielectric unions, excavation, bedding, backfilling, chasing in wall and all works required as shown on drawings, specifications and P.M. instructions. 16 mm O.D. x 2.2mm thick, sleeve 25 mm diameter	ML	1750		
1.2.4	**Water Meter** Supply, install, test and commission water meter with totalizer, 1" diameter, including air vent, check valve, strainer, two gate valves, connection to municipality's potable water supply network, fittings, and all accessories and works required to complete the work as shown on the drawings and as per the preamble, specifications and the supervision engineer's requirements.	No.	1		

Bill No. (1): MECHANICAL WORKS

Item No.	Description	Unit	Qty.	Unit Rate	Amount
1.2.5	**Water Collector** Supply and install hot and cold water collector's type GIACOMINI or E.A				
A.	1 ¼" cold water collector	NO	13		
B.	¾" hot water collector	NO	13		
1.3	**Waste and Drainage System**				
1.3.1	**Vertical and Horizontal UPVC Pipe** Supply, install UPVC pipes and fittings similar to local made P.S SN 8. The rate shall include all needed connections and all types of fittings caps, all done according to drawings, specifications and the approval of the supervision engineer.				
A.	Diameter 2"	ML	218		
B.	Diameter 4"	ML	390		
C.	Diameter 6"	ML	24		
1.3.2	**Floor Drain** Supply, install, testing and commissioning of, 4"chrome plated threaded 15x15cm cast brass cover, multi inlet adjustable with trap floor drain. Including, floor clean out plug, HDPE siphon or equivalent and necessary accessories, connections with fixtures and main drain pipes. As per drawings, specifications and related codes.	No.	71		
1.3.3	**Clean Out** Supply, install, testing and commissioning of the following, HDPE or equivalent , non-adjustable 15x15 cm stainless steel cover, and floor clean out with gas and water tightness ABS plug and necessary accessories as per drawings, specifications and related codes. (Ø 4")	No.	51		

Bill No. (1): MECHANICAL WORKS

Item No.	Description	Unit	Qty.	Unit Rate	Amount
	Carried Before			**Shekel**	636568
1.3.4	**Manholes** Supply and install PRE-CAST concrete manholes of 15 cm thick walls and base with heavy duty cast iron covers and frames of 25 tons load strength with all necessary excavation back filling as specified to the required depth with steps of galvanized pipe of 1/2" benching and connecting it to main city manholes as shown in drawing and in accordance to specifications and approval engineers.				
A.	Size 60 cm (inside diameter)	No.	4		
B.	Size 80 cm (inside diameter)	No.	10		
1.3.5	**Sanitary Fixture and Their Accessories**				
1.3.5.1	**Lavatory** Supply and installation of porcelain wash basin glazed white (from creavit or equivalent) with chrome plated mixer adoption of the supervising engineer) half leg measuring 56 × 45 cm and isolate it from the wall using the Sika Anti-gray color of the rot with water mixer (of the finest international standards, according to the supervising engineer adoption) and Siphon and all chrome-plated The price includes valves angle 13 mm chrome holder soap of the finest varieties mirror 60 × 45 cm with aluminum frame and providing sink series and rubber stopper and all necessary for installation, operation and drainage to the nearest packet assembly floor drain , according to the specifications and plans and instructions of the supervising engineer.	No.	31		

Bill No. (1): MECHANICAL WORKS

Item No.	Description	Unit	Qty.	Unit Rate	Amount
1.3.5.2	**Water Closet** Supply, install, testing and commissioning of, floor mounted, white color, Porcelain, siphon jet water closet/toilet with an elongated bowl, seat with open front and check hinge, and carrier. or equivalent including necessary accessories, 9-lt capacity cistern, valves, fittings, 13mm stop angle valves, chrome plated 13mm hose, heavy duty side l m length 13mm Chrome plated hand shower, connection to drainage and water systems as per drawings, specifications and related codes.	No.	31		
1.3.5.3	**Sink (private)** Supply, install, testing and commissioning of glazed porcelain basin sink white size 20 × 40 × 60 cm excellent water mixer chrome the price shall include plastic Siphon and the drain to the nearest floor drain and all that is required for installation and installation according to plans and specifications and instructions of the supervising engineer. Counter top Kitchen sink	No.	10		
1.4	**Plastic Water Tanks** Supply and install plastic water tanks made in Palestine each one has a capacity 2000L. The price shall include stand with heavy duty, valves and all fittings needed according to drawings.	No.	15		

Item No.	Description	Unit	Qty.	Unit Rate	Amount
1.5	**<u>Fire fighting</u>** Supply and install galvanized steel pipes to ASTM-A53 grade "A" schedule-40 for firefighting system pipework, inside building. The unit price shall include valves, fittings, and all accessories and works required to complete the work and as per preambles, specifications, and the supervision of engineer's requirements.				
A.	Diameter 3”	ML	35		
B.	Diameter 2”	ML	15		
1.5.1	**<u>Fire Fighting Pump Set</u>** Supply, install, test and commission firefighting pump set(factory assembled), composed of one electric on duty pump, one stand-by electrical pump, jockey pump, and automatic control panel. The unit price shall include pressure vessel, electric control panel, electrical wiring, galvanized steel frame, inertia base, vibration isolators, concrete base, piping from water reservoir to delivery header outlet complete with test lines, and all required valves and fittings as detailed on the drawings, specifications and P.M. instructions.	No.	1		

Bill No. (1): MECHANICAL WORKS

Item No.	Description	Unit	Qty.	Unit Rate	Amount
1.5.2	**Fire Extinguisher** Supply and install Portable Fire Extinguisher of 6 Kg. Co2 capacity each in Location as decided by the Engineer. The installation shall be complete with brackets and it should be in accordance with the Civil Defense specification.	No.	4		
1.5.3	**Drain / Test Valves** Supply, install, test and commission 2" Dia. drains & test valves complete with nipple and cap to NFPA requirements.	No.	2		
1.5.4	**Fire Hose Reel Cabinets** Supply, install, test and commission fire hose reel cabinets to, complete with 30 meters long 1 ½" diameter rubber hose of 16 bar working pressure. The unit price shall include hose cabinet, pressure reducing valve, globe valve and automatic swinging recessed type cabinet as detailed on drawings and as per the specifications and the supervision engineer's requirements.	No.	7		