Chapter Four

Structural Analysis and Design

4

4-1 Introduction.

4-2 Design Method and Requirements.

4-3 Check of Minimum Thickness of Structural Member.

4-4 Design of Topping.

4-5 Design of One Way Rib Slab.

4-6 Design of Tow Way Rib Slab.

4-7 Design of Beam.

4-8 Design of Stair.

4-9 Design of Column.

4-10 Design of Shear Wall.

4-11 Design of Footing.

4-1 Introduction:

Many structures are built of reinforced concrete: bridges, buildings, retaining walls, tunnels, and others.

Reinforced concrete is logical union of two materials: plain concrete, which possesses high compressive strength but little tensile strength, and steel bars embedded in the concrete, which can provide the needed strength in tension.

Plain concrete is made by mixing cement, fine aggregate, coarse aggregate, water, and frequently admixtures.

Understanding of reinforced concrete behavior is still far from complete, building codes and specifications that give design procedures are continually changing to reflect latest knowledge.

Structural concrete can be classified into:

- ✓ Lightweight concrete with unit weight from about 1350 to 1850 kg/m3.
- ✓ Normal weight concrete with unit weight from about 1800 to 2400 kg/m3.
- ✓ Heavyweight concrete with unit weight from about 3200 to 5600 kg/m3.

4-2 Design method and requirements:

The design strength provided by a member is calculated in accordance with the requirements and assumptions of **ACI code (318_08)**.

- ✓ **Strength design method:**

In ultimate strength design method, the service loads are increased by factors to obtain the load at which failure is considered to be occurring.

This load called factored load or factored service load. The structure or structural element is then proportioned such that the strength is reached when factored load is acting.

The computation of this strength takes into account the nonlinear stress-strain behavior of concrete.

The strength design method is expressed by the following,

Strength provided ≥ strength required to carry factored loads.

NOTE:

The statically calculation and the key plans dependent on the architectural plans.

- ✓ Code : ACI 2008

  UBC

- ✓ Material :

Concrete: B300…. (*fc*'□□30*0.8 □□24*MPa*) .

Reinforcement steel : The specified yield strength of the reinforcement

{fy = 420 N/mm²(MPa)}

Mild steel : A-36

Connection Type : Weld , Bolts

- ✓ **Factored loads:**

The factored loads for members in our project are determined by:

Wu = 1.2 DL + 1.6 LL ACI-code-318-08(9.2.1).

4-3Checkof minimum thickness for structuralmembers:

TABLE 9.5(a) — MINIMUM THICKNESS OF NONPRESTRESSED BEAMS OR ONE-WAY

SLABS UNLESS DEFLECTIONS ARE CALCULATED. (ACI 318M-11)

	Minimum thickness , h			
	Simply supported	One end continuous	Both end continuous	Cantilever
Member	Members not supporting or attached to partitions or other construction likely to be damaged by large deflection			
Solid one way Slabs	L/20	L/24	L/28	L/10
Beams or ribbed one way slabs	L/16	L/18.5	L/21	L/8

Table (4.1): Check of minimum thickness of structural members

For rib :

hmin=L/18.5=476/18.5=25.7 cm" One end continuous "

hmin=L/21 =419/21 = 19.95 cm " Both ends continuous "
select :35 cm thickness with 27 cm block and 8 cm toping .

4-4 Design of topping:

- ✓ **Statically system for topping** :

Requirements For Ribbed Slab Floor According to *ACI- (318-08)* .

bw ≥ 10cm……**ACI(8.13.2)**

Select bw=12 cm

h ≤ 3.5*bw ……..…**ACI(8.13.2)**

Select h=35cm<3.5*12= 49 cm

tf ≥ Ln/12≥50mm ……..**ACI(8.13.6.1)**

Select tf=8cm

No reinforcement is required by analysis. **According to ACI 10.5.4**

Consider the topping as strip of (1m) width, and span of mold length with both end fixed in the ribs

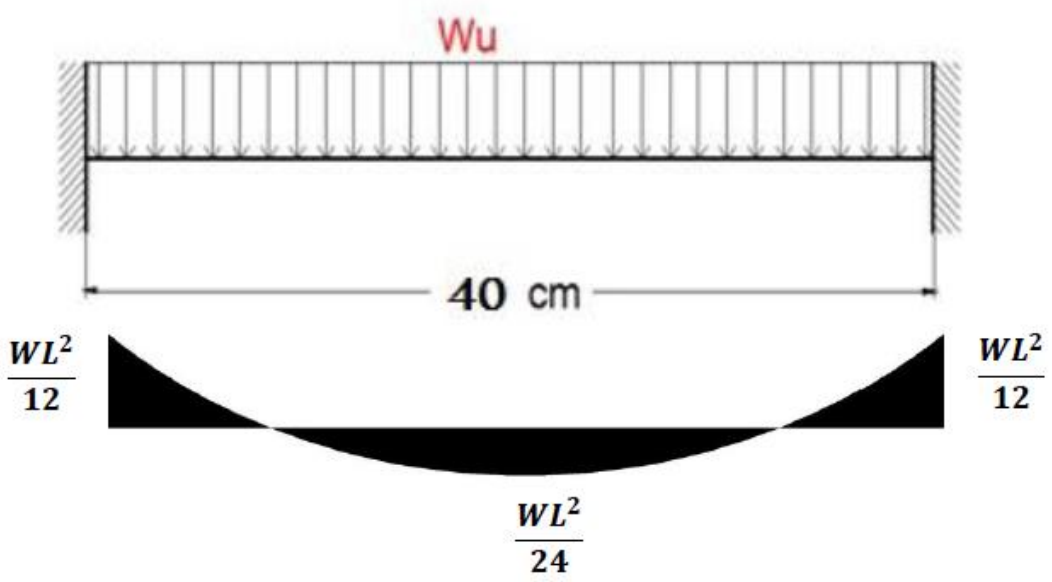

Figure 4-1: Topping load and moment diagram.

For the topping , the total dead load to be used in the analysis and design is calculated as follows:

No.	Parts of Rib	Calculation
1	**Toping**	0.08*1*25= 2 KN/m/rib
2	**Mortar**	0.07*1*25= 1.75 KN/m/rib
		Sum = 3.75KN/m/rib

Table (4 – 2) Dead load calculation for topping

Nominal total dead load = 3.75 KN/m.

Nominal total live load = 1.5KN/m^2.

Nominal total snow = (h-400)/400 = 1.2 KN/m^2

1.5> 1.2 Take Nominal live load = 1.5KN/m^2.

L_L = 1.5KN/m^2 * 1 m = 1.5KN/m

Design of topping for ribbed slab as a plain concrete section :-

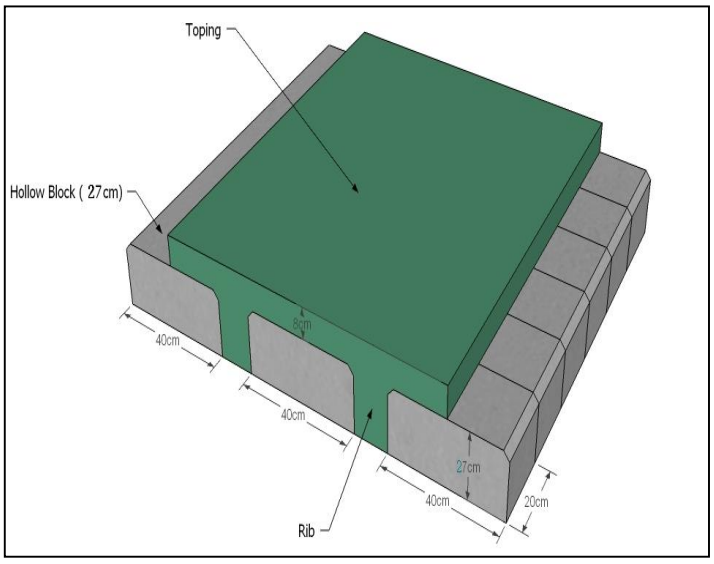

Figure (4-2): Topping of one way rib slab

q_u= 1.2×D+1.6×L

6.9KN/m. (Totalfactored load)

$$\text{Negative } M_u = \frac{W_u * l^2}{12} = 0.092 \text{KN.m} \qquad \text{Control}$$

$$\text{Positive } M_u = \frac{W_u * l^2}{24} = 0.046 \text{KN.m}$$

$$\emptyset M_n = 0.55 * 0.42 * \sqrt{24} * 1000 * 80^2/6 = 1.207 \text{ KN.m}$$

$$\emptyset M_n = 1.207 \text{ KN.m} > M_u = 0.092 \text{ KN.m}$$

No structural reinforcement is needed. Therefore, shrinkage and temperature reinforcement must be provided.

For the shrinkage and temperature reinforcement :-

$$\rho = 0.0018$$

$$A_s = \rho * b * h = 0.0018 * 1000 * 80 = 144 \text{ mm}^2/\text{m}$$

Step (s) is the smallest of:

1. 3h = 3×80 =240 mm**control ACI 10.5.4**
2. 450mm.
3. S =380(280/f_s)-2.5C_c=380 (280/(2/3 420))-2.5 .20=330mm**ACI 10.6.4**

∴ Use Ø8 @ 20 cm in both directions , S = 200mm <S_{max}= 240mm ….. ok

Check shear strength:

$$V_u = \frac{q_u * l}{2} = 1.38 \text{ KN.m}$$

$$\emptyset * Vc = \frac{0.75}{6} * \sqrt{24} * 1 * 80 = 49 \text{ KN}$$

49>1.38

∴No shear reinforcement is requirement.

4-5Design Of Rib1 in Ground floor:

For the one-way ribbed slabs, the total dead load to be used in the analysis and design is calculated as follows:

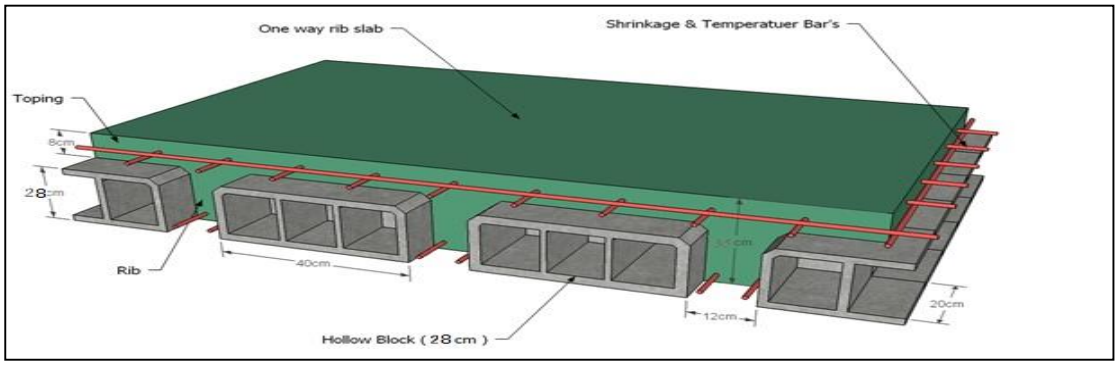

Figure (4-3) : One way rib slab

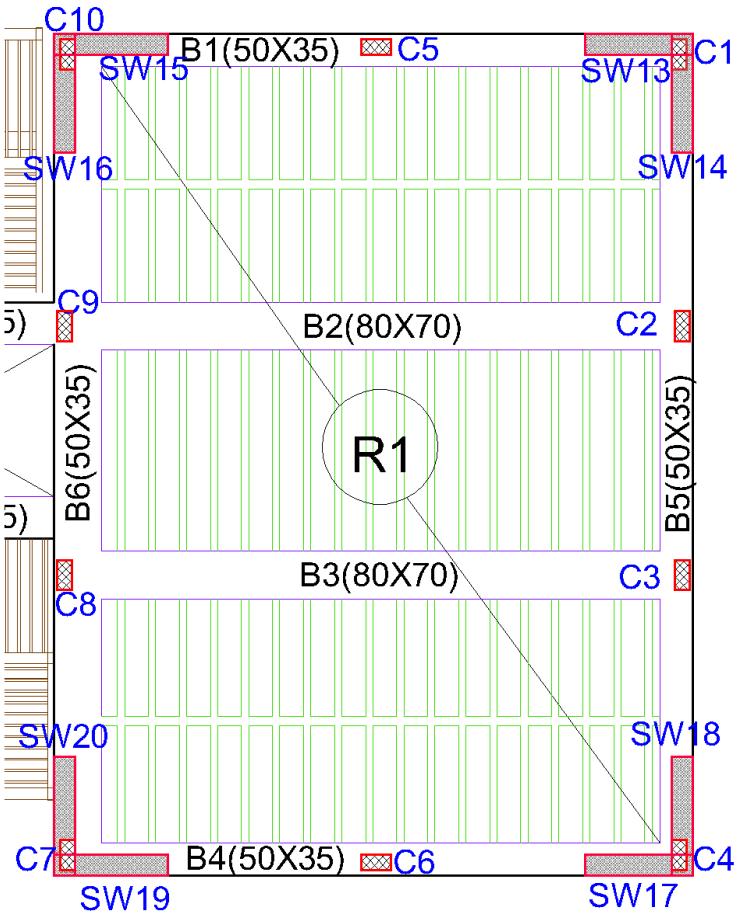

Figure 4.4: Rib 1in ground floor

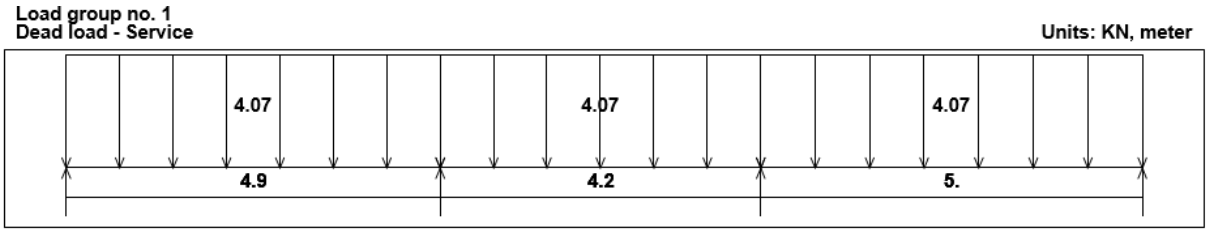

Figure 4-5: Dead load in the rib.

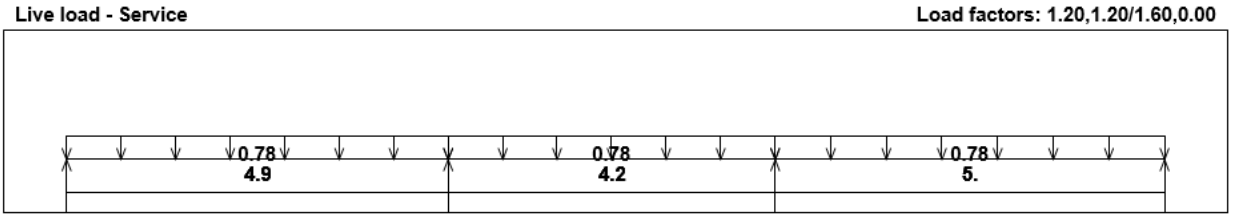

Figure4-6: Live load in the rib .

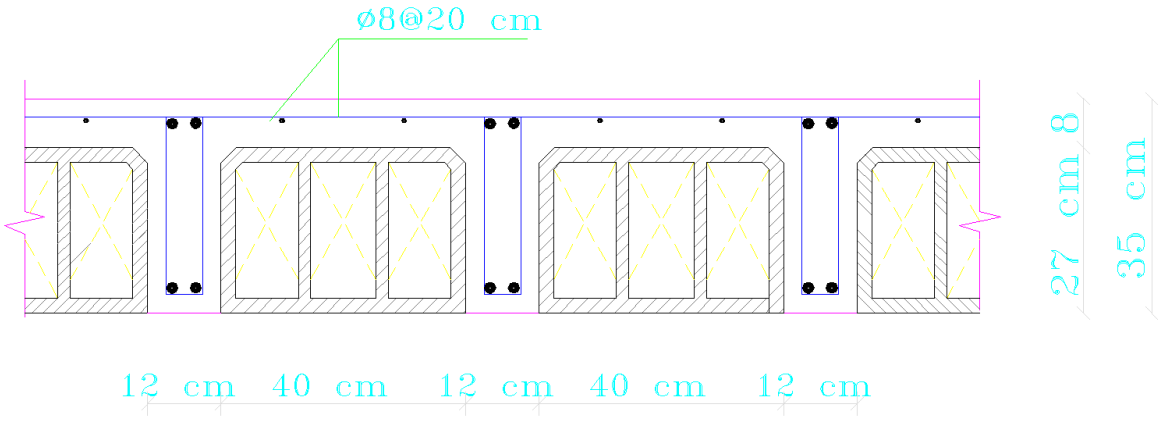

Figure 4-7: Geometry of rib and it's dimension

Reactions

Factored

DeadR	9.85	24.22	24.75	10.04
LiveR	2.73	6.95	7.04	2.77
Max R	12.58	31.17	31.8	12.81
Min R	9.64	26.3	26.85	9.84
Service				
DeadR	8.21	20.18	20.63	8.37
LiveR	1.71	4.34	4.4	1.73
Max R	9.91	24.53	25.03	10.1
Min R	8.08	21.48	21.94	8.24

Fig 4-8: Reactions of rib (live and dead)

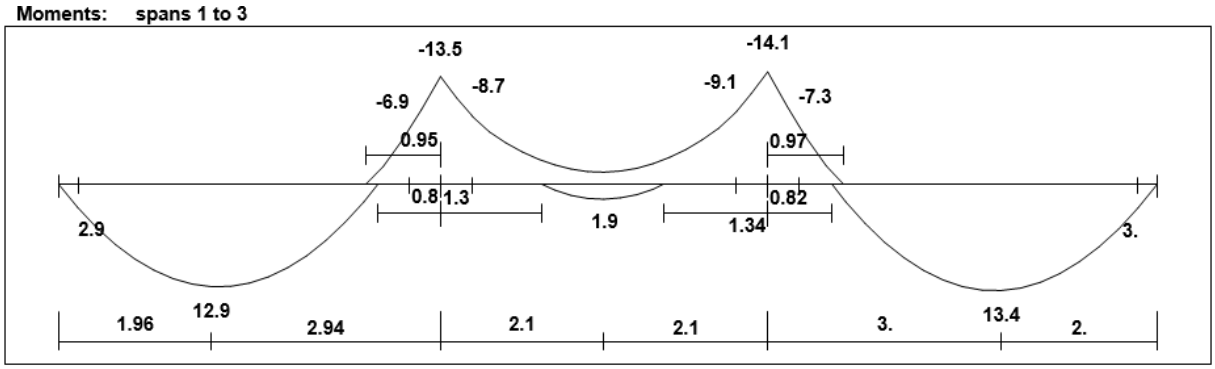

Fig 4-9: Moment diagram of Rib

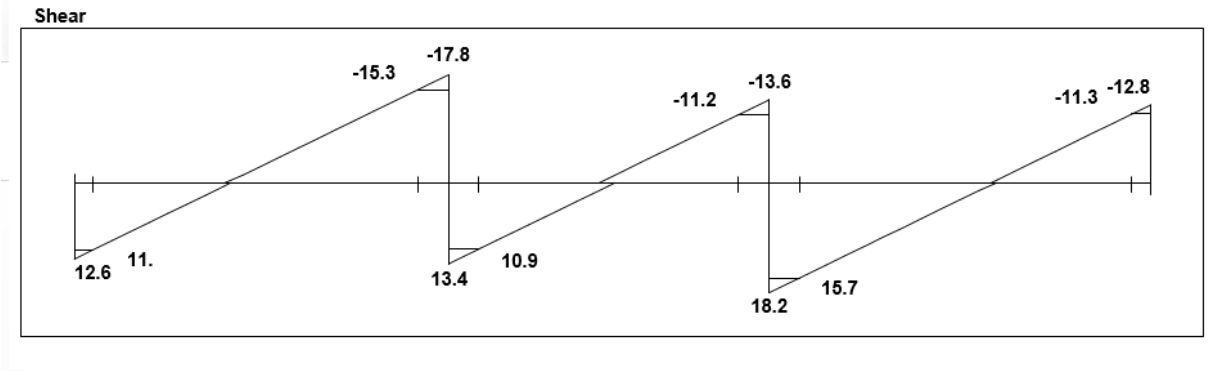

Fig -.10: Shear diagram of Rib.

Calculation of the total dead load for one way rib slab is shown in the following table:

No.	Material	Quality Density KN/m^3	Calculation		
1	**Topping**	25	**0.52×0.08×25 = 1.04**		
2	**Rib**	25	**0.27×0.12×25 = 0.81**		
3	**Slope concert**	25	**0.52×0.07×25 = 0.91**		
4	**Block**	10	**0.4×0.27×10 = 1.08**		
5	**Plaster**	22	**0.52×0.02×22 =0.2288**		
			∑ =	**4.07**	**KN/m/rib**

Table (4 – 3) Calculation of the total dead load for one way rib slab.

L = 1.5*0.52 = 0.78KN/m/rib

qu = 1.2* D+ 1.6*L

= 1.2*4.07+1.6*.78 KN/m/rib

= 6.132 KN/m/rib

Effective Flange Width (b_E):-**ACI-318-11 (8.10.2)**

b_E For T- section is the smallest of the following:-

= L (smallest span) / 4 = 419/ 4 =104.75cm b_t

b_E = 12 + 16 t = 12 + 16 (8) = 140 cm

b_E = $b_e \leq$ center to center spacing between adjacent beams = 52 cm.

Control

b_E **For T-section = 52cm .**

Design of Rib (1):-

Moment Design for (R 1):-

Design of Positive Moment:-

4-5-1 Design of Positive Moment for (Span1):-(Mu=12.9KN.m)

Assume bar diameter ø 12 for main positive reinforcement

d =h- cover - $d_{stirrups}$– $\frac{d_b}{2} = 350 - 20 - 10 - \frac{12}{2} = 314\ mm$

Check if a>h_f to determine whether the section will act as rectangular or T- section.

M_{nf} =0.85. f_c'. b_e. h_f. $(d - \frac{h_f}{2})$

$= 0.85 \times 24 \times 0.52 \times 0.08 \times \left(0.314 - \frac{0.08}{2}\right) \times 10^3 = 232.527$ KN. m

$M_{nf} \gg \frac{M_u}{\varphi} = \frac{12.9}{0.9}$= 14.33 KN.m , the section will be designed as rectangular section with b_e =0.52m

$R_n = \frac{M_u}{\emptyset b d^2} = \frac{12.9 \times 10^6}{0.9 \times 520 \times 314^2} = 0.279 Mpa$

$M = \frac{f_y}{0.85 f_c'} = \frac{420}{0.85 \times 24} = 20.6$

$P = \frac{1}{m}\left(1 - \sqrt{1 - \frac{2.m.R_n}{420}}\right) = \frac{1}{20.6}\left(1 - \sqrt{1 - \frac{2 \times 20.6 \times .279}{420}}\right) = 0.00067$

$A_{s,req}$ = ρ.b.d = 0.00067 ×520×314 =109.39mm^2

Check for As min:-

$$A_S\ \min = \frac{\sqrt{fc'}}{4(fy)}(bw)(d)$$ **ACI-318 (10.5.1)**

$$A_S\ \min = \frac{\sqrt{24}}{4(420)}(120)(314) = 109.877 mm^2$$

$$A_S\ \min = \frac{1.4}{(fy)}(bw)(d)$$

$$A_S\ \min = \frac{1.4}{420}(120)(314) = 125.6 mm^2$$ **controls**

Use 2 ø 10 ,$A_{s,provided}$= 2*78.5=157mm^2>$A_{s,required}$= 125.6mm^2 …. Ok

$$S = \frac{120-40-20-(2\times10)}{1} = 40\ mm > 25 > d_b = 10\ mm \boldsymbol{OK}$$

Check for strain:-

$$a = \frac{A_{s.f_y}}{0.85 b f_c'} = \frac{157\times420}{0.85\times520\times24} = 6.216 mm$$

$$c = \frac{a}{\mathcal{B}_1} = \frac{6.216}{0.85} = 7.31\ mm$$

$$\varepsilon_s = 0.003\left(\frac{d-c}{c}\right) = 0.003\left(\frac{284\ -7.31}{7.31}\right) = 0.1135 > 0.005 \qquad \boldsymbol{0k}$$

4-5-2 Design of Positive Moment for (Span2) :- (Mu=1.9KN.m)

d =h- cover - $d_{stirrups}$– $\frac{d_b}{2} = 350 - 20 - 10 - \frac{12}{2} = 314\ mm$

$R_n = \frac{M_u}{\emptyset b d^2} = \frac{1.9\times10^6}{0.9\times520\times314^2} = 0.0411\ Mpa$

$m = \frac{f_y}{0.85 f_c'} = \frac{420}{0.85\times24} = 20.6$

$\rho = \frac{1}{m}\left(1 - \sqrt{1 - \frac{2.m.R_n}{420}}\right) = \frac{1}{20.6}\left(1 - \sqrt{1 - \frac{2\times20.6\times0.0411}{420}}\right) = 0.0001$

$A_{s,req} = \rho.b.d = 0.0001\times520\times314 = 16.328 mm^2$

Check for As min:

$A_s\ min = \frac{\sqrt{fc'}}{4(fy)}(bw)(d)$ **ACI-318 (10.5.1)**

$A_s\ min = \frac{\sqrt{24}}{4(420)}(120)(314) = 109.877 mm^2$

$A_s\ min = \frac{1.4}{(fy)}(bw)(d)$

$A_s\ min = \frac{1.4}{420}(120)(314) = 125.6 mm^2$ **controls**

$A_{s,required} = 125.6 mm^{2.}$

Use 2 ø 10 ,$A_{s,provided}$= 2*78.5=157mm^2>$A_{s,required}$= 125.6 mm^2 …. Ok

$$S = \frac{120-40-20-(2\times10)}{1} = 40\ mm > 25 > d_b = 10\ mm \boldsymbol{OK}$$

Check for strain:-

$$a = \frac{A_{s.f_y}}{0.85bf'_c} = \frac{157\times420}{0.85\times520\times24} = 6.216mm$$

$$c = \frac{a}{\mathcal{B}_1} = \frac{6.216}{0.85} = 7.31\ mm$$

$$\varepsilon_s = 0.003\left(\frac{d-c}{c}\right) = 0.003\left(\frac{284\ -7.31}{7.31}\right) = 0.1135 > 0.005 \qquad \boldsymbol{0k}$$

4-5-3 Design of Positive Moment for(Span3):- (Mu=13.4KN.m)

Assume bar diameter ø 12 for main positive reinforcement

$$d = h\text{- cover - } d_{stirrups} - \frac{d_b}{2} = 350 - 20 - 10 - \frac{12}{2} = 314\ mm$$

$$R_n = \frac{M_u}{\emptyset bd^2} = \frac{13.4\times10^6}{0.9\times520\times314^2} = 0.290Mpa$$

$$m = \frac{f_y}{0.85f'_c} = \frac{420}{0.85\times24} = 20.6$$

$$\rho = \frac{1}{m}\left(1-\sqrt{1-\frac{2.m.R_n}{420}}\right) = \frac{1}{20.6}\left(1-\sqrt{1-\frac{2\times20.6\times0.290}{420}}\right) = 0.000695$$

$A_{s,req}$ = ρ.b.d = 0.000695×520×314 = 113.47 mm^2

Check for As min:-

$$A_{s\ min} = \frac{\sqrt{fc'}}{4(fy)}(bw)(d)$$ **ACI-318 (10.5.1)**

$$A_{s\ min} = \frac{\sqrt{24}}{4(420)}(120)(314) = 109.877 mm^2$$

$$A_{s\ min} = \frac{1.4}{(fy)}(bw)(d)$$

$$A_{s\ min} = \frac{1.4}{420}(120)(314) = 125.6 mm^2 \textbf{ controls}$$

Use 2 ø 10 ,$A_{s,provided}$= 2*78.5=157mm^2>$A_{s,required}$= 125.6mm^2 …. Ok

$$S = \frac{120-40-20-(2\times10)}{1} = 40\ mm > 25 > d_b = 10\ mm \boldsymbol{OK}$$

Check for strain:-

$$a = \frac{A_{s.fy}}{0.85 b f_c'} = \frac{157\times420}{0.85\times520\times24} = 6.216 mm$$

$$c = \frac{a}{\mathcal{B}_1} = \frac{6.216}{0.85} = 7.31\ mm$$

$$\varepsilon_s = 0.003\left(\frac{d-c}{c}\right) = 0.003\left(\frac{284\ -7.31}{7.31}\right) = 0.1135 > 0.005 \qquad \boldsymbol{0k}$$

Design of Negative Moment:-

4-5-4 DesignFor Negative Moment for(Support1):- (Mu=-13.5KN.m)

Assume bar diameter ø 12 for main positive reinforcement

$$d = h - \text{cover} - d_{stirrups} - \frac{d_b}{2} = 350 - 20 - 10 - \frac{12}{2} = 314\ mm$$

$$R_n = \frac{M_u}{\emptyset b d^2} = \frac{13.5\times10^6}{0.9\times120\times314^2} = 1.267\ Mpa$$

$$m = \frac{f_y}{0.85 f_c'} = \frac{420}{0.85\times24} = 20.6$$

$$\rho=\frac{1}{m}\left(1-\sqrt{1-\frac{2.m.R_n}{420}}\right)=\frac{1}{20.6}\left(1-\sqrt{1-\frac{2\times20.6\times1.267}{420}}\right)=0.00311$$

$A_{s,req}$ = ρ.b.d = 0.00311 ×120×314 = 117.1848mm^2

Check for As min:-

$$A_s\ \text{min}=\frac{\sqrt{fc'}}{4(fy)}(bw)(d)\ \textbf{ACI-318 (10.5.1)}$$

$$A_s\ \text{min}=\frac{\sqrt{24}}{4(420)}(120)(314)=109.877m^2$$

$$A_s\ \text{min}=\frac{1.4}{(fy)}(bw)(d)$$

$$A_s\ \text{min}=\frac{1.4}{420}(120)(314)=125.6mm^2\ \textbf{controls}$$

Use 2 ø 10 ,$A_{s,provided}$= 2*78.5=157mm^2>$A_{s,required}$= 125.6 mm^2 …. Ok

$$S=\frac{120-40-20-(2\times10)}{1}=40\ mm>25>d_b=10\ mm\boldsymbol{OK}$$

Check for strain:-

$$a=\frac{A_{s.f_y}}{0.85bf_c'}=\frac{157\times420}{0.85\times520\times24}=6.216mm$$

$$c=\frac{a}{\mathcal{B}_1}=\frac{6.216}{0.85}=7.31\ mm$$

$$\varepsilon_s=0.003\left(\frac{d-c}{c}\right)=0.003\left(\frac{284\ -7.31}{7.31}\right)=0.1135>0.005\qquad \boldsymbol{0k}$$

4-5-5 Design For Negative Moment for(Support2):- (Mu=-14.1KN.m)

Assume bar diameter ø 12 for main positive reinforcement

d =h- cover - $d_{stirrups}$ $-\frac{d_b}{2} = 350 - 20 - 10 - \frac{12}{2} = 314\ mm$

$R_n = \frac{M_u}{\emptyset b d^2} = \frac{14.1\times10^6}{0.9\times120\times314^2} = 1.324\ Mpa$

$m = \frac{f_y}{0.85 f_c'} = \frac{420}{0.85\times24} = 20.6$

$\rho = \frac{1}{m}\left(1 - \sqrt{1 - \frac{2.m.R_n}{420}}\right) = \frac{1}{20.6}\left(1 - \sqrt{1 - \frac{2\times20.6\times1.324}{420}}\right) = 0.00326$

$A_{s,req}$ = ρ.b.d = 0.00326×120×314 = 122.83 mm^2

Check for As min:-

$$A_{s\ min} = \frac{\sqrt{fc'}}{4(fy)}(bw)(d)$$ **ACI-318 (10.5.1)**

$$A_{s\ min} = \frac{\sqrt{24}}{4(420)}(120)(314) = 109.87 m^2$$

$$A_{s\ min} = \frac{1.4}{(fy)}(bw)(d)$$

$$A_{s\ min} = \frac{1.4}{420}(120)(314) = 125.6 mm^2$$ **controls**

Use 2 ø 10 ,$A_{s,provided}$= 2*78.5=157mm^2>$A_{s,required}$= 125.6 mm^2 …. Ok

$$S = \frac{120-40-20-(2\times10)}{1} = 40\ mm > 25 > d_b = 10\ mm \boldsymbol{OK}$$

Check for strain:-

$$a = \frac{A_{s.f_y}}{0.85 b f_c'} = \frac{157\times420}{0.85\times520\times24} = 6.216mm$$

$$c = \frac{a}{\mathcal{B}_1} = \frac{6.216}{0.85} = 7.31\ mm$$

$$\varepsilon_s = 0.003\left(\frac{d-c}{c}\right) = 0.003\left(\frac{284\ -7.31}{7.31}\right) = 0.1135 > 0.005 \qquad \boldsymbol{0k}$$

4-5-6 Shear Design for (R 1):-

V_u at distance d from support= 15.7KN (for Span1)

Shear strength V_c, provided by concrete for the joists may be taken 10% greater than for beams. This is mainly due to the interaction between the slab and closely spaced ribs.**(ACI, 8.13.8).**

$$V_c = \frac{1.1}{6}\sqrt{f_c'}\,b_w d = \frac{1.1}{6}\sqrt{24}\times120\times314\times10^{-3} = 33.84\ KN$$

øV_c =0.75×33.84 =25.38 KN

0.5 ø V_c =0.5×25.38 =12.69 KN

$0.5 \text{ ø } V_c < V_u = 15.7 < \text{ø } V_c$

Minimum shear reinforcement is required ($A_{v,min}$),**Except**for concrete joist construction.

SO,NO shear reinforcement is required

4-6 Design of Two way ribbed slab:

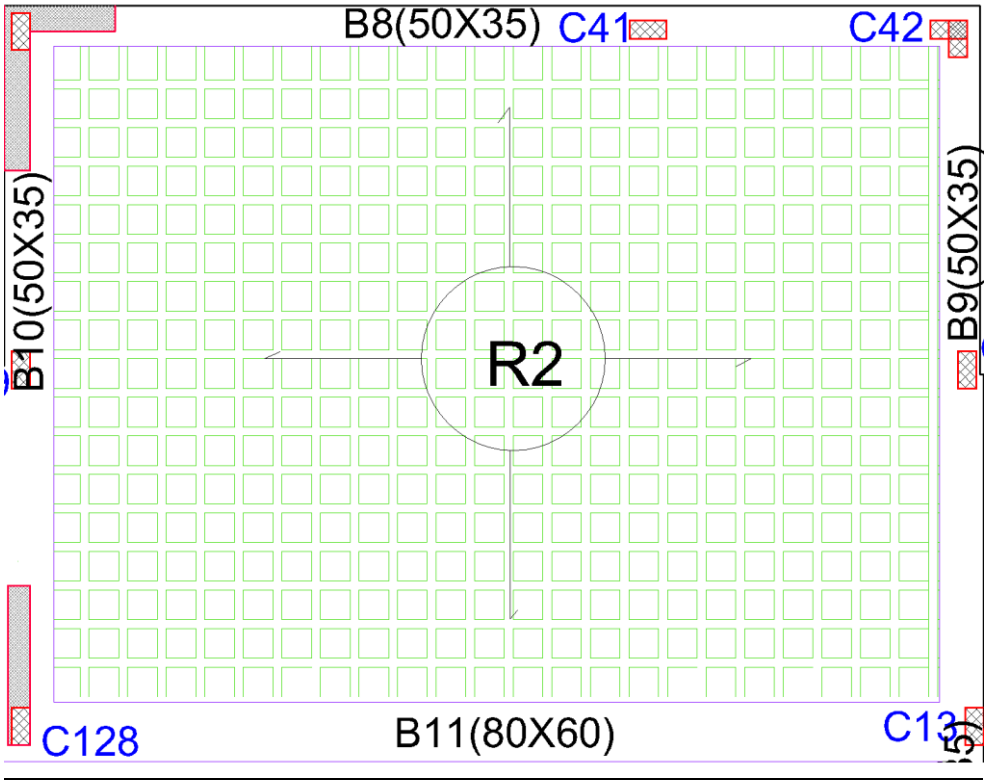

Fig (4- 11): two way rib slab location at the ground floor slab.

4-6-1 Determination of Thickness for Two Way Ribbed Slab:

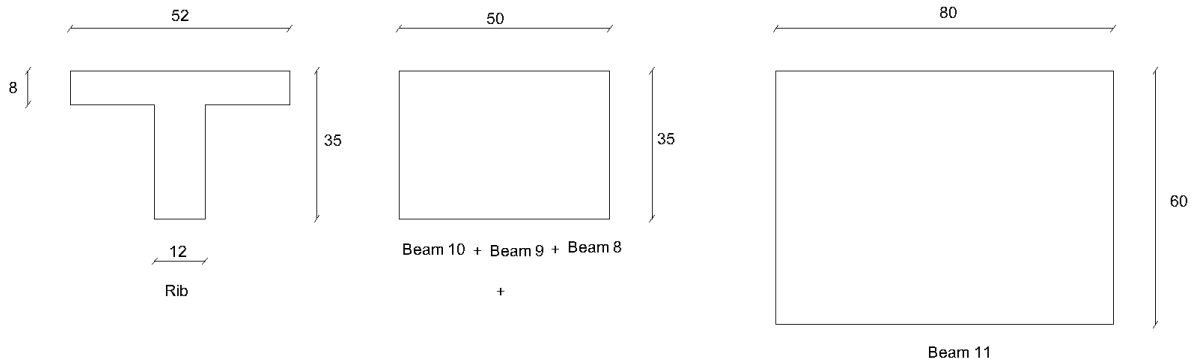

Fig (4- 12): rib and beams sections

Assume H =35cm

$I_{b8}=\frac{50*35^3}{12}$=178646 cm^4

$I_{b9}=\frac{50*35^3}{12}$=178646 cm^4

$I_{b10}=\frac{50*35^3}{12}$=178646 cm^4

$I_{b11}=\frac{80*60^3}{12}$=1440000 cm^4

$Y_c=\frac{40*8*4+35*12*16}{40*8+35*12}$=11.63cm

$I_r=\frac{52*11.63^3}{3}-\frac{40*3.63^3}{3}+\frac{12*23.37^3}{3}$=53014 cm^4

$I_{s1}=\frac{53014*(\frac{885}{2}+80)}{52}$=532689$cm^4$

$I_{s2}=\frac{53014*(\frac{885}{2}+50)}{52}$=502104 cm^4

$I_{s3}=\frac{53014*(\frac{1195}{2}+50)}{52}$=660126 cm^4

$I_{s4}=\frac{53014*(\frac{1195}{2}+50)}{52}$=660126 cm^4

$\alpha_1 = \frac{178646}{502104} = 0.36$

$\alpha_2 = \frac{1440000}{532689} = 2.7$

$\alpha_3 = \frac{178646}{660126} = 0.27$

$\alpha_4 = \frac{178646}{660126} = 0.27$

$\alpha_{fm} = \frac{0.36+2.70+0.27+0.27}{4} = 0.9 \leq 2.0$

$\beta = \frac{11.95}{8.85} = 1.35$

$h_{min} = \frac{8850*(0.8+(\frac{420}{1400}))}{36+1.35*5*(0.9-0.2)} = 239mm > 125mm$

h= 35 cm $> h_{min}$= 23.9cm

Load Calculation:

No.	Parts of Flight	Calculation	
1	Slop	25*0.07*0.52*0.52 = 0.4732KN	
2	Topping	25*0.08*0.52*0.52 = 0.541KN	
3	Rib	25*0.27*0.12*(0.52+0.4) = 0.7452KN	
4	Block	10*0.27*0.4*0.4 = 0.432 KN	
5	Plaster	22*0.02*0.52*0.52 = 0.119 KN	
		Sum	2.310

Table (4 – 4) Calculation of the total dead load for tow way rib slab.

Dead Load of slab:

DL $=\frac{2.31}{0.52*0.52}$ =8.55 KN/m^2

W_D =1.2*8.55 =10.25 KN/m^2

LL=1.5 KN/m^2

W_L =1.6*1.5=2.4 KN/m^2

W = 10.25+2.4 =12.65 KN/m^2

Moments Calculations:

m $=\frac{8.85}{11.95}$ =0.75

From tables use Case (1): Cneg= 0.0

*C*a,dL =0.061 , ,*C*b,dL =0.019

*C*a,LL =0.061 , ,*C*b,LL =0.019

$M^+_{a,d}= C_{a\,dl} \times W_{ud} \times (L_a)^2 = 0.061 \times 10.25 \times (8.85)^2 \times 0.52 = 25.46$ KN .m / rib.

$M^+_{aL}= C_{a\,ll} \times W_{ul} \times (L_a)^2 = 0.061 \times 2.4 \times (8.85)^2 \times 0.52 = 5.96$ KN .m / rib.

$M_{a\ positive} = 25.46 + 5.96 = 31.42$ KN .m / rib.

Negative moment at discontinuous edges = 1/3

positive

$M_{a\ neg}$=(1/3) ×31.42 = 10.47 KN .m / rib.

$M^+_{b,d}= C_{b\,dl} \times W_{ud} \times (L_b)^2 = 0.019 \times 10.25 \times (11.95)^2 \times 0.52 = 14.46$ KN .m / rib.

$M^+_{b\,L} = C_{bll} \times W_{ul} \times (L_b)^2 = 0.019 \times 2.4 \times (11.95)^2 \times 0.52 = 3.39$KN .m / rib.

$M_{b\ positive}$= 14.46 + 3.39 = 17.87KN .m / rib.

Negative moment at discontinuous edges = 1/3

positive.

$M_{b\ neg}$= (1/3) ×17.87 = 5.95KN.m /rib.

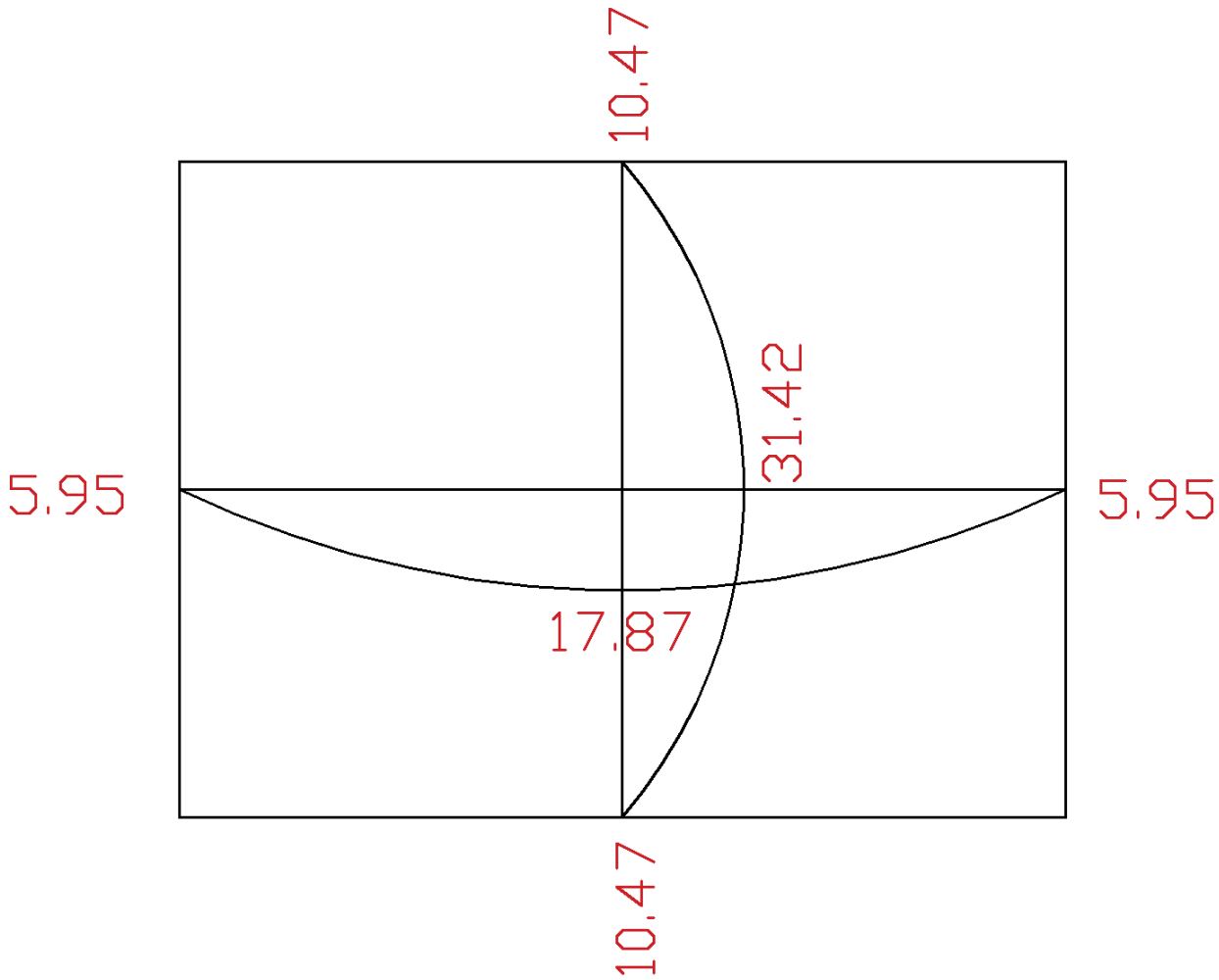

Figure (4-13) : moment diagram for tow way rib slab

4-6-2design of flexure for rib (13):

4-6-2-1Design of positive moments:

Design of Positive Moment :- (Ma=31.42 k.m)

Assume bar diameter ø 14 for main positive reinforcement

d =h- cover - $d_{stirrups} - \frac{d_b}{2} = 350 - 20 - 8 - \frac{14}{2} = 315\ mm$

$R_n = \frac{M_u}{\emptyset b d^2} = \frac{31.42\times10^6}{0.9\times520\times315^2} = 0.68Mpa$

$m = \frac{f_y}{0.85f_c'} = \frac{420}{0.85\times24} = 20.6$

$\rho = \frac{1}{m}\left(1-\sqrt{1-\frac{2.m.R_n}{420}}\right) = \frac{1}{20.6}\left(1-\sqrt{1-\frac{2\times20.6\times0.68}{420}}\right) = 0.00647$

$A_{s,\,req} = \rho.b.d = 0.00647\times520\times315 = 270\ mm^2$

Check for As min:-

$A_S\ \min = \frac{\sqrt{fc'}}{4(fy)}(bw)(d)$ **ACI-318 (10.5.1)**

$A_S\ \min = \frac{\sqrt{24}}{4(420)}(120)(315) = 110.23mm^2$

$A_S\ \min = \frac{1.4}{(fy)}(bw)(d)$

$A_S\ \min = \frac{1.4}{420}(120)(315) = 126mm^2$ **controls**

$As_{req} = 270mm^2 > As_{min} = 126\ mm^2$ **OK**

Use 2 ø14, As, provided= 308 mm^2>$A_{s,\,required}$= 270mm^2… Ok

Check for strain:-

$a = \frac{A_{s.f_y}}{0.85b\ f_c'} = \frac{308\times420}{0.85\times520\times24} = 12.19mm$

$c = \frac{a}{\beta_1} = \frac{12.19}{0.85} = 23.44mm$

$\varepsilon_s = 0.003\left(\frac{d-c}{c}\right) = 0.003\left(\frac{315-23.44}{23.44}\right) = 0.037 > 0.005$ **0*k***

Design of Positive Moment:- (Mb=17.87KN.m)

d =h- cover - $d_{stirrups} - \frac{d_b}{2} = 350 - 20 - 8 - \frac{14}{2} = 315mm$

$R_n = \frac{M_u}{\emptyset b d^2} = \frac{17.87\times10^6}{0.9\times520\times315^2} = 0.38Mpa$

$m = \frac{f_y}{0.85f_c'} = \frac{420}{0.85\times24} = 20.6$

$\rho = \frac{1}{m}\left(1-\sqrt{1-\frac{2.m.R_n}{420}}\right) = \frac{1}{20.6}\left(1-\sqrt{1-\frac{2\times20.6\times0.38}{420}}\right) = 0.0009$

$A_{s,req} = \rho.b.d = 0.0009\times520\times315 = 150\ mm^2$

Check for As min:-

$A_S\ min = \frac{\sqrt{fc'}}{4(fy)}(bw)(d)$ **ACI-318 (10.5.1)**

$A_S\ min = \frac{\sqrt{24}}{4(420)}(120)(315) = 110.23mm^2$

$A_S\ min = \frac{1.4}{(fy)}(bw)(d)$

$A_S\ min = \frac{1.4}{420}(120)(315) = 126mm^2$ **controls**

$As_{req} = 150mm^2 > As_{min} = 126\ mm^2$ **OK**

Use 2 ø12, As, provided= 226.2 mm^2>$A_{s,\ required}$= 150mm^2… Ok

Check for strain:-

$a = \frac{A_{s.f_y}}{0.85b\ f_c'} = \frac{226.2\times420}{0.85\times520\times24} = 8.96\ mm$

$c = \frac{a}{\beta_1} = \frac{8.96}{0.85} = 10.54mm$

$$\varepsilon_s = 0.003\left(\frac{d-c}{c}\right) = 0.003\left(\frac{285-10.54}{10.54}\right) = 0.078 > 0.005 \qquad \textbf{0}k$$

4-6-2-2design of negative moments:

Design of Negative Moment :- (Ma=-10.47KN.m)

Assume bar diameter ø 12 for negative reinforcement

d =h- cover - $d_{stirrups} - \frac{d_b}{2} = 350 - 20 - 8 - \frac{12}{2} = 316\ mm$

$R_n = \frac{M_u}{\emptyset b d^2} = \frac{10.47 \times 10^6}{0.9 \times 120 \times 316^2} = 0.97\ Mpa$

$m = \frac{f_y}{0.85 f_c'} = \frac{420}{0.85 \times 24} = 20.6$

$\rho = \frac{1}{m}\left(1 - \sqrt{1 - \frac{2.m.R_n}{420}}\right) = \frac{1}{20.6}\left(1 - \sqrt{1 - \frac{2 \times 20.6 \times 0.97}{420}}\right) = 0.00243$

$A_{s,\,req}$ = ρ.b.d = 0.00243 ×120×316 = 92 mm^2

Check for As min:-

$$A_{S\ min} = \frac{\sqrt{fc'}}{4(fy)}(bw)(d)$$ **ACI-318 (10.5.1)**

$$A_{S\ min} = \frac{\sqrt{24}}{4(420)}(120)(316) = 110.58 mm^2$$

$$A_{S\ min} = \frac{1.4}{(fy)}(bw)(d)$$

$$A_{S\ min} = \frac{1.4}{420}(120)(316) = 126.4 mm^2$$ **controls**

As_{req} = 92 <As_{min}= 126.4mm^2 **OK**

Use 2 ø10, $As_{,\,provided}$= 157.08 mm^2>$A_{s,\,required}$= 126.4mm^2... Ok

Check for strain:-

a = $\frac{A_{s.f_y}}{0.85bf_c'} = \frac{157.08\times420}{0.85\times120\times24} = 26.95\ mm$

x= $\frac{a}{\beta_1} = \frac{26.95}{0.85} = 31.7\ mm$

$\varepsilon_s = 0.003\left(\frac{d-x}{x}\right) = 0.003\left(\frac{316-31.7}{31.7}\right) = 0.027 > 0.005\boldsymbol{0k}$

Design of Negative Moment :- (Mb=-5.96KN.m)

Assume bar diameter ø 12 for negative reinforcement

d =h- cover - $d_{stirrups} - \frac{d_b}{2} = 350 - 20 - 8 - \frac{12}{2} = 316\ mm$

$R_n = \frac{M_u}{\emptyset bd^2} = \frac{5.96\times10^6}{0.9\times120\times316^2} = 0..55\ Mpa$

m= $\frac{f_y}{0.85f_c'} = \frac{420}{0.85\times24} = 20.6$

ρ= $\frac{1}{m}\left(1-\sqrt{1-\frac{2.m.R_n}{420}}\right) = \frac{1}{20.6}\left(1-\sqrt{1-\frac{2\times20.6\times0.55}{420}}\right) = 0.00133$

$A_{s,\ req}$ = ρ.b.d = 0.00133 ×120×316 = 50.35 mm^2

Check for As min:-

$A_{S\ min} = \frac{\sqrt{fc'}}{4(fy)}(bw)(d)$ **ACI-318 (10.5.1)**

$A_{S\ min} = \frac{\sqrt{24}}{4(420)}(120)(316) = 110.58mm^2$

$A_{S\ min} = \frac{1.4}{(fy)}(bw)(d)$

$A_{S\ min} = \frac{1.4}{420}(120)(316) = 126.4mm^2$ **controls**

As_{req} = 50.35 <As_{min}= 126.4mm^2 **OK**

Use 2 ø10, $As_{,\ provided}$= 157.08 mm^2>$A_{s,\ required}$= 126.4mm^2... Ok

Check for strain:-

$a = \frac{A_{s.f_y}}{0.85 b f_c'} = \frac{157.08 \times 420}{0.85 \times 120 \times 24} = 26.95\ mm$

$x = \frac{a}{\beta_1} = \frac{26.95}{0.85} = 31.7\ mm$

$\varepsilon_s = 0.003\left(\frac{d-x}{x}\right) = 0.003\left(\frac{316-31.7}{31.7}\right) = 0.027 > 0.005\boldsymbol{0k}$

4-6-3 Design of shear for rib:

Maximum shear coefficient in short direction as in case (1) W_a@ m = 0.75

W_a = 0.76

The total load on the panel =11.95*8.85*12.65= 1338 KN

The load per rib at the face of long beam =0.76*1338*0.52/(2*11.95)= 22.12 KN

$V_{ud} = V_{uface}$ - Wu*b_f*d = 22.12 – 10.65*0.52*0.316= 20.37 KN

The shear strength of one rib:

$V_c = \frac{1.1}{6}\sqrt{f_c'} b_w d = \frac{1.1}{6}\sqrt{24} \times 120 \times 316 \times 10^{-3} = 34.1\ KN$

øV_c =0.75×34.1 =25.55KN

0.5 ø V_c =0.5×20.37=10.19KN

V_{ud}< ø V_c

Minimum shear reinforcement is required except for joist construct

4-7 Design of Beam (B3) in the Ground Floor:

Material :-

concrete B300 Fc' = 24 N/mm^2

Reinforcement Steel Fy = 420 N/mm^2

By using **ATIR** program, we get the envelope moment and shear force diagram

as the:-

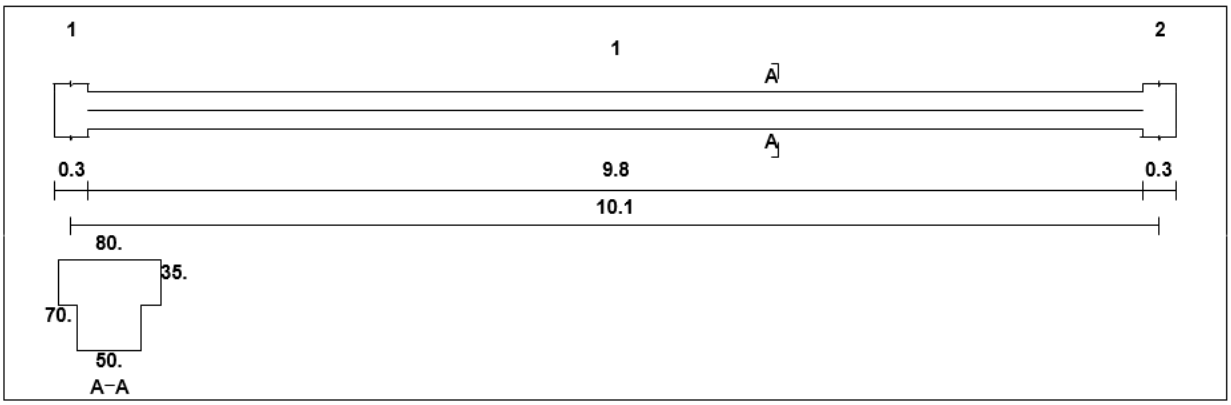

Figure (4-14) : Beam geometry.

Load on beam :-

Load of this beam come from reactions of Rib1 as following:

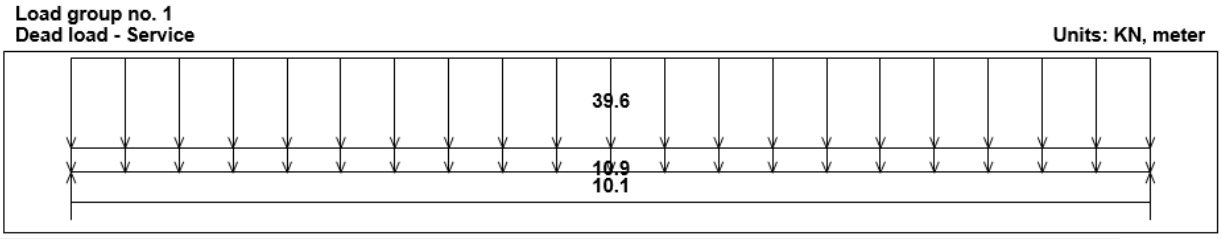

Figure (4-15): Dead load in the Beam

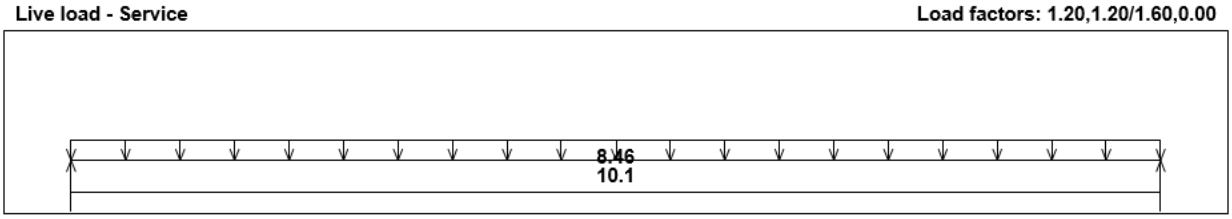

Figure (4-16) : Live load in the Beam

»Self-weight of beam =10.9 KN/m

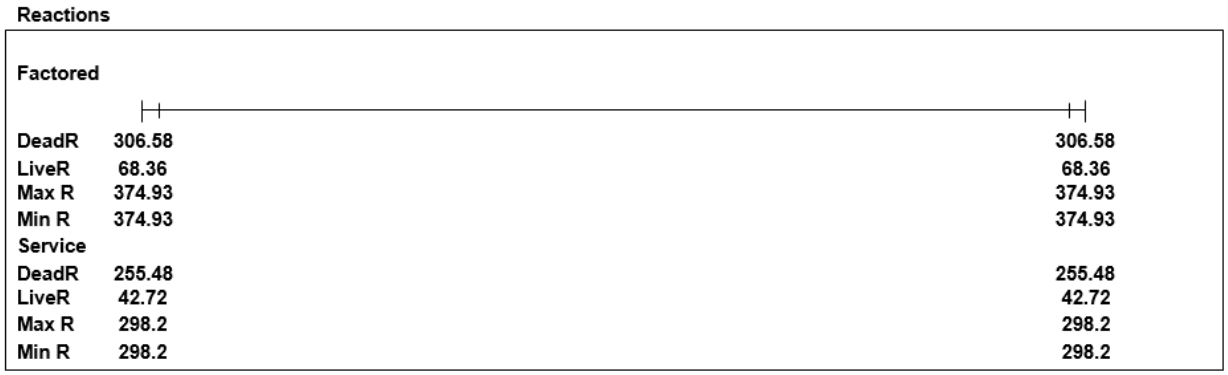

Fig (4-17): Reactions of Beam (live and dead)

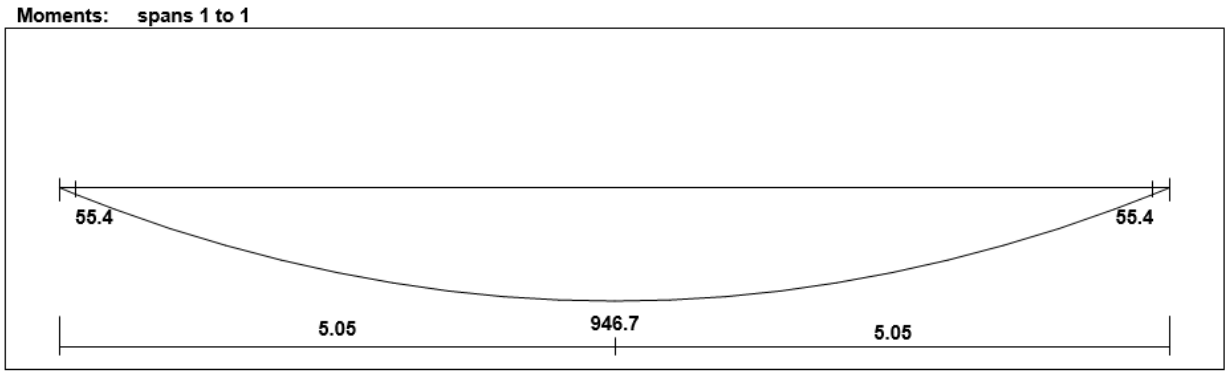

Figure (4-18) : Moment Diagram in beam

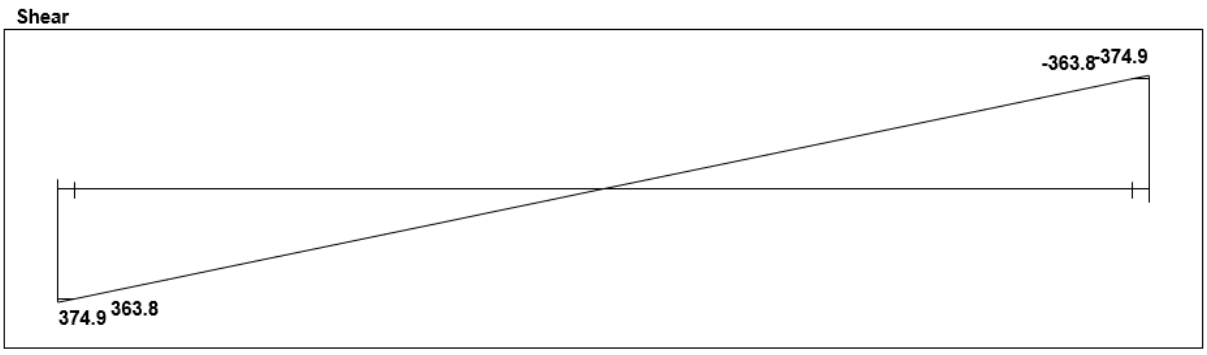

Figure (4-19) : Shear Diagram in beam

4-7-1 Load Calculations:-

Dead Load Calculations for Beam(B 3):-

The distributed Dead and Live loads acting upon B3can be defined from the support reactions R1.

From Rib1

The**maximum**support reaction from Dead Loads for R1 upon B3 is 20.63KN.

self-weight = 10.9KN

DL =20.63/ 0.52=39.67+ 10.9= 50.573KN/m

Live Load calculations for Beam (B 2):-

From Rib1

The **maximum** support reaction from Live Loads for R1upon B3 is 4.4 KN The distributed Live Load from the Rib1 on B3.

LL =4.4/ 0.52= 8.46KN/m.

qu = 1.2* D+ 1.6*L

= 1.2*50.57+1.6*8.46KN/m

= 74.22 KN/m

Positive Moment $= \frac{wl^2}{8} = \frac{74.22 * 10.1^2}{8}$ **= 946.39 KN.m**

Positive moment from program =946.7 KN.m

4-7-2 Moment Design for Beam (B 3):-

Flexural Design For Positive Moment :-

(Mu=946.7 KN.m)

Determine of $M_{n,max}$

d =700– 40 -10 -25\2 = 637.5 mm

$$x = \frac{3}{7}d = \frac{3}{7}.637.5 = 273.2\ mm$$

$$a = \mathcal{B}.x = 273.2 * 0.85 = 232.22\ mm$$

$Mn_{,max}$= 0.85∗ f'_c ∗a *b(d - $\frac{a}{2}$) = 0.85*24*232.22*800*(637.5-232.22/2) *10^{-6}= 1975.9KN.m

Ø Mn_{max} = 0.82* 1975.9= 1620.238KN.m >946.7

Desgin The Section Singly Reinforced Concrete Section .

Determine of $M_{n,max}$

d =700– 40 -10 -25\2 = 637.5 mm

Check if a>h_f to determine whether the section will act as rectangular or T- section.

M_{nf} =$0.85.f'_c.b_e.hf.(d-\frac{hf}{2})$

$$= 0.85 \times 24 \times 800 \times 350 \times \left(637.5 - \frac{350}{2}\right) \times 10^{-6} = 2641.8\ \text{KN.m}$$

$M_{nf} \gg \frac{M_u}{\varphi} = \frac{946.7}{0.9}$= 1051.89 KN.m , the section will be designed as rectangular section with b_e =800 mm.

$$R_n = \frac{M_u}{\emptyset bd^2} = \frac{946.7\times10^6}{0.9\times800\times637.5^2} = 3.235Mpa.$$

$$m = \frac{f_y}{0.85f'_c} = \frac{420}{0.85\times24} = 20.6$$

$$\rho = \frac{1}{m}\left(1 - \sqrt{1 - \frac{2.m.R_n}{420}}\right) = \frac{1}{20.6}\left(1 - \sqrt{1 - \frac{2\times20.6\times3.235}{420}}\right) = 0.00843$$

A_s = ρ.b.d = 0.00843×800×637.5 = 4299.3 mm^2.

Check for $A_{s,min}$:-

$As_{min} = \frac{\sqrt{fc'}}{4(fy)}(bw)(d) = \frac{\sqrt{24}}{4*420} * 500 * 637.5 = 929.49 mm^2$

$As_{min} = \frac{1.4}{(fy)}(bw)(d) = \frac{1.4}{420} * 500 * 637.5 = 1062.5\ mm^2$ **Controls**

$A_s = 4299.3\ mm^2$

Use 9ø25 Bottom, $A_{s,provided}$= 4417.83mm^2>$A_{s,required}$= 4299.3 mm^2 … Ok

Check spacing:-

$S = \frac{500-40*2-20-(9*25)}{8} = 21.875mm < d_b = 25 < 25$ ***not ok***

Use 6ø32 Bottom, $A_{s,provided}$= 4825.48>$A_{s,required}$= 4299.3 mm^2 … Ok

$S = \frac{500-40*2-20-(6*32)}{5} = 41.6mm > d_b = 25 > 25$ ***not ok***

Check for strain:-

$a = \frac{A_{s.fy}}{0.85bf_c'} = \frac{4825.48\times420}{0.85\times800\times24} = 124.185mm$

$c = \frac{a}{\mathcal{B}_1} = \frac{124.185}{0.85} = 146.1mm$

$$\varepsilon_s = 0.003\left(\frac{d-c}{c}\right) = 0.003\left(\frac{637.5-146.1}{146.1}\right) = 0.010 > 0.005\ \emptyset = .\mathbf{9}$$

4-7-3 Shear Design for (B 3):-

V_u max = 363.8 KN

$V_c = \frac{1}{6}\sqrt{fc'}b_w d = = \frac{1}{6}\sqrt{24} * 500 * 637.5/1000 = 260.258$ KN

ΦV_c= 0.75*260.258 =195.193 KN

Vu =363.8<ΦV_c= 195.193

$$Vs = \frac{Vu}{\emptyset} - Vc$$

$$Vs, req = \frac{363.8}{\emptyset.75} - 260.258 \quad = 224.8 \text{ KN}$$

$$Vs' = \frac{1}{3} * \sqrt{fc'} * bw * d$$

$$Vs' = \frac{1}{3} * \sqrt{24} * 500 * 637.5 \quad = 520.5$$

Vs'**OK**<Vs

Smax =d/2 =637.5/2 = 318.75 mm*control*

Smax = 600 mm

Use 2 leg Φ 14 @150mm

S=150mm < 318.75OK

$$Vs, pro = \frac{Av * fy * d}{s}$$

$Vs = \frac{307.8*420*637.5}{150*1000}$ = 549.4 KN ≥V_u max = 363.8 **OK**

4-8 Design of Stair

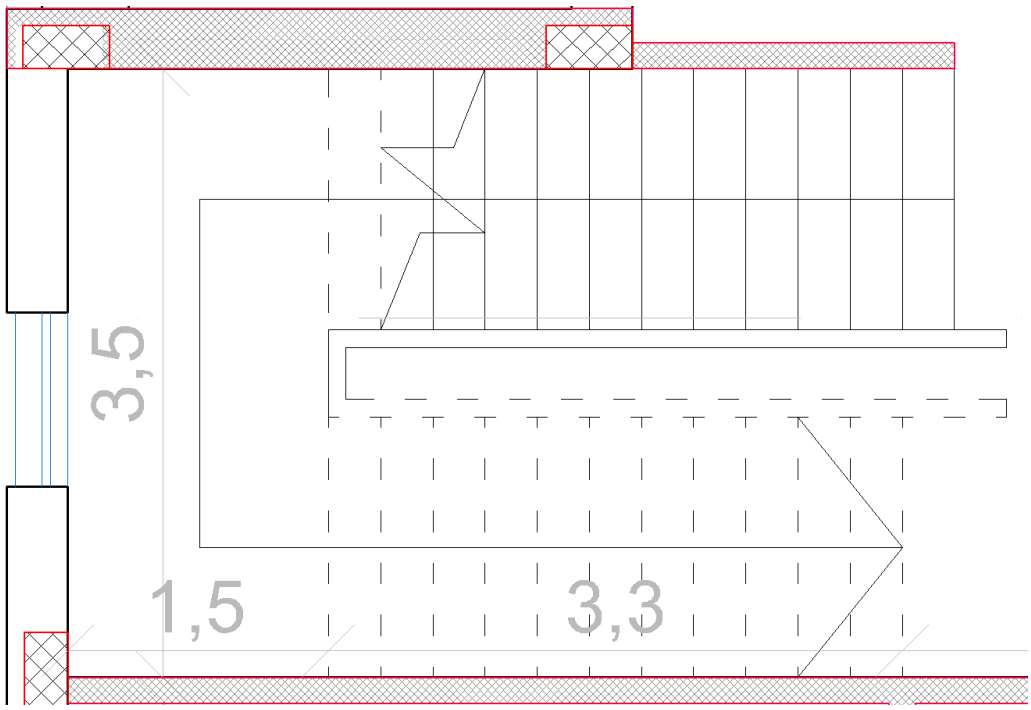

Fig (4-20): Stair Plan.

❖ **Material :-**

⇒ concrete B300 Fc' = 24 N/mm^2

⇒ Reinforcement Steel Fy = 420 N/mm^2

4-8-1 Design of Flight :-

✓ **Determination of Thickness:-**

$h_{min} = L/20$

$h_{min} = 3.30/20 = 16.5$ cm

Take h = 25 cm

The Stair Slope by $\theta = \tan^{-1}(16.3 / 30) = 28.6^{o}$

✓ **Load Calculation:**

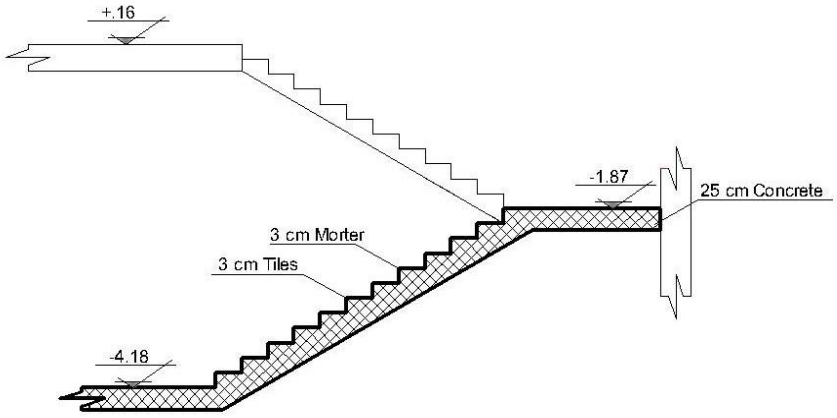

Fig (4.21):Stair Section.

Dead Load for Flight for 1m Strip:-

No.	Parts of Flight	Calculation	
1	Tiles	23*0.03*1*((0.35+0.163)/0.3) = 1.18Kn/m	
2	Mortar	22*0.03*1*((0.3+0.163)/0.3) = 1.02Kn/m	
3	Stair	25*0.5*0.163*1 = 2.04Kn/m	
4	R.C	25*0.25*1 / cos28.6 ^{o} = 7.11Kn/m	
5	Plaster	22*0.02*1 / cos28.6^{o} = 0.51Kn/m	
		Sum	11.9Kn/m

Table (4-5): Dead Load Calculation of Flight.

Live Load For Landing For 1m Strip = 5*1 = 5 Kn/m

Factored Load For Flight :-

W_U = 1.2 ×11.90 + 1.6×5 =19.9Kn/m

✓ **System of Flight:-**

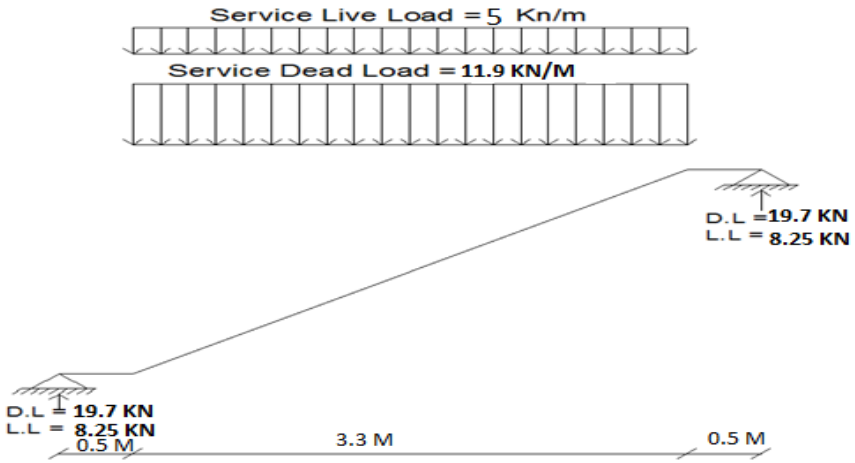

(Fig 4.22): Statically System and Loads Distribution of Flight**.**

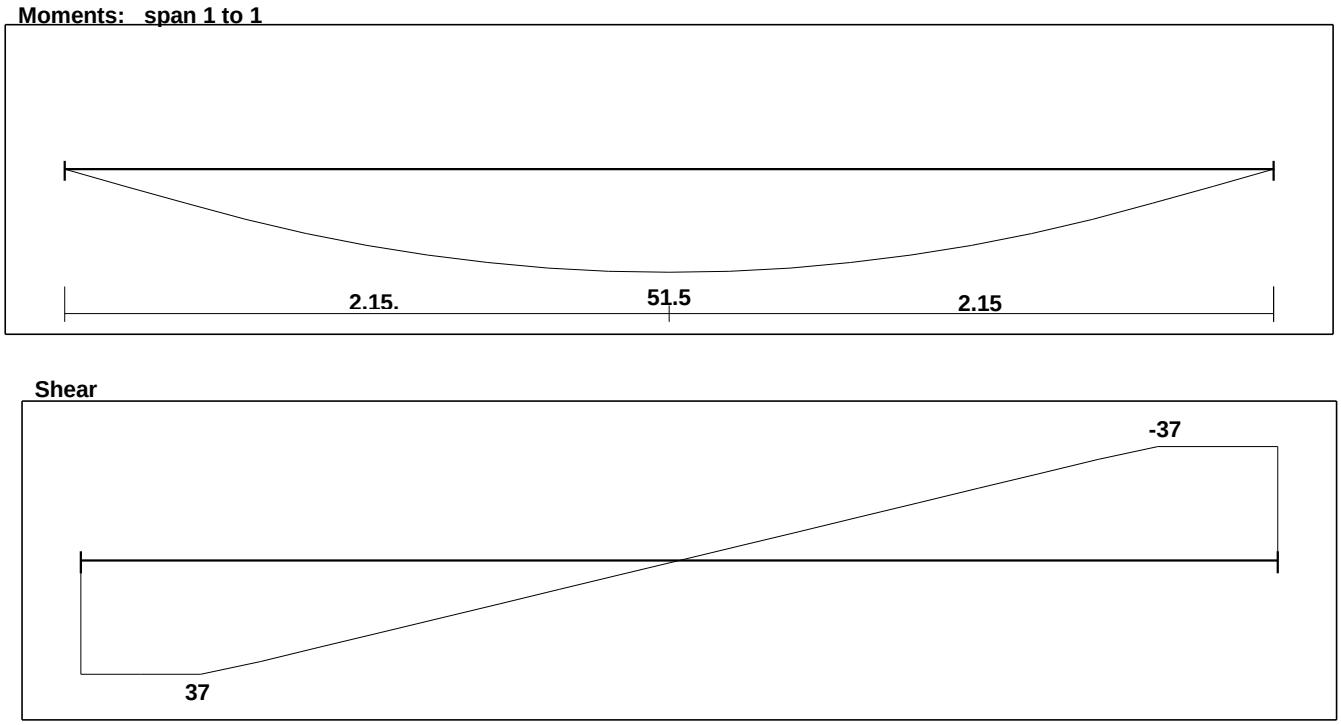

Fig (4-23): Shear and Moment Envelope Diagram of Flight**.**

4-8-1-1 Design of Shear for Flight :- (Vu=37.0 Kn)

Assume bar diameter ø 14 for main reinforcement

d =h- cover $-\frac{d_b}{2} = 250 - 20 - \frac{14}{2} = 223\ mm$

$V_c = \frac{1}{6}\sqrt{fc'}b_w\ d = = \ \frac{1}{6}\sqrt{24} * 1000 * 223 = 182.1$ Kn

$\Phi\ V_c$ = 0.75* 182.1 = 136.6 KN> Vu = 37Kn**…… No shear reinforcement are required**

4-8-1-2 Design of Bending Moment for Flight :- (Mu=51.5 Kn.m)

$R_n = \frac{M_u}{\emptyset bd^2} = \frac{51.5\times10^6}{0.9\times1000\times223^2} = 1.15\ Mpa$

$m = \frac{f_y}{0.85f_c'} = \frac{420}{0.85\times24} = 20.6$

$\rho = \frac{1}{m}\left(1 - \sqrt{1 - \frac{2.m.R_n}{420}}\right) = \frac{1}{20.6}\left(1 - \sqrt{1 - \frac{2\times20.6\times1.15}{420}}\right) = 0.00282$

$A_{s,req}$ = ρ.b.d = 0.00282 ×1000×223 = 630 mm^2/m

$A_{s,min}$= 0.0018*1000*250 = 450mm^2/m

As_{req} = 630 mm^2>$A_{s,min}$=450mm^2/m

Check for Spacing :-

S = 3h = 3*300 =900 mm

$S = 380*(\frac{280}{\frac{2}{3} * 420}) - 2.5*20 = 330$

S = 450 mm

S = 330mm **…… is control**

Use ø12 @ 150 mm ,$A_{s,provided}$= 770 mm^2>$A_{s,required}$= 630mm^2… Ok

Check for strain:-

$$a = \frac{A_{s.f_y}}{0.85b\ f'_c} = \frac{770\times420}{0.85\times1000\times24} = 15.85\ mm$$

$$c = \frac{a}{\mathcal{B}_1} = \frac{15.85}{0.85} = 18.65\ mm$$

$$\varepsilon_s = 0.003\left(\frac{d-c}{c}\right) = 0.003\left(\frac{173-18.65}{18.65}\right) = 0.025 > 0.005 \quad \ldots\ldots \boldsymbol{0k}$$

1- Lateral or Secondary Reinforcement For Flight :-

$A_{s,req}$= $A_{s,min}$ =0.0018*1000*250 = 450mm^2

Use ø10@ 150mm ,$A_{s,provided}$= 523 mm^2>$A_{s,required}$= 360mm^2… Ok

4-8-2 Design of Middle Landing :-

✓ **Determination of Thickness:-**

h_{min} = L/20

h_{min} = 3.30 /20 = 16.5 cm

Take h = 25 cm

✓ **Load Calculation:-**

Dead Load For Solid 7 Landing For 1m Strip:-

No.	Parts of Landing	Calculation	
1	Tiles	23*0.03*1= 0.69Kn/m	
2	Mortar	22*0.03*1= 0.66Kn/m	
4	R.C	25*0.25*1= 6.25Kn/m	
5	Plaster	22*0.02*1= 0.44Kn/m	
		Sum	8.04Kn/m

Table (4-6): Dead Load Calculation of Middle Landing.

Live Load For Landing = 5*1 = 5 Kn/m

Reaction From Flight:-

DL =19.7Kn/m
LL =8.25Kn/m

Total Dead Load = 8.04 + 19.7 = 27.74Kn/m

Total Live Load = 5 + 8.25 = 13.25 Kn/m

Factored Load For Landing :-

W_U = 1.2 ×27.74 + 1.6×13.25 =54.50Kn/m

✓ **System of Landing:-**

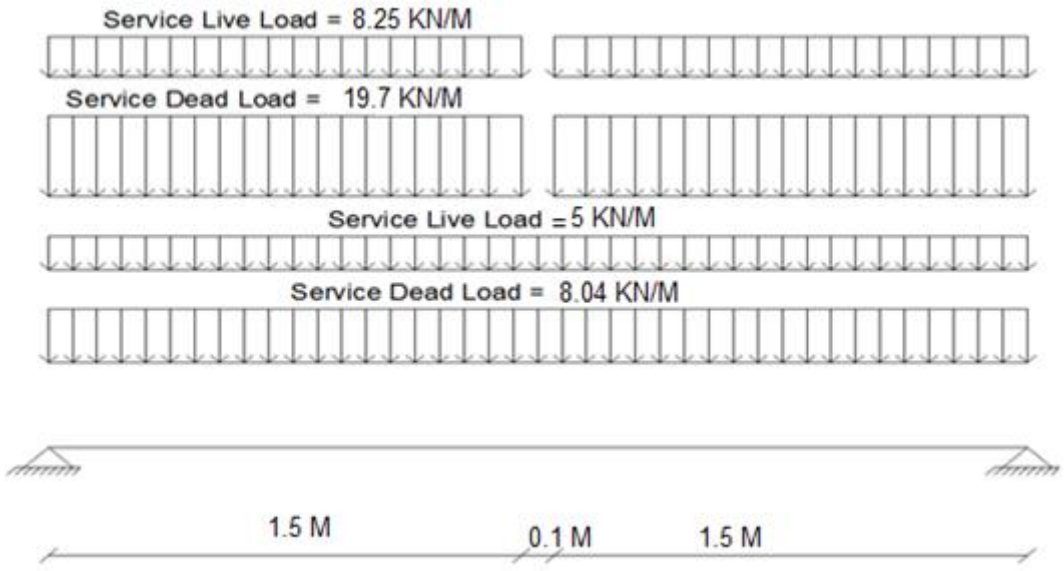

Fig (4-24): Statically System and Loads Distribution of Middle Landing.

M o m e n t / S h e a r E n v e l o p e (Factored) Units:kN,meter

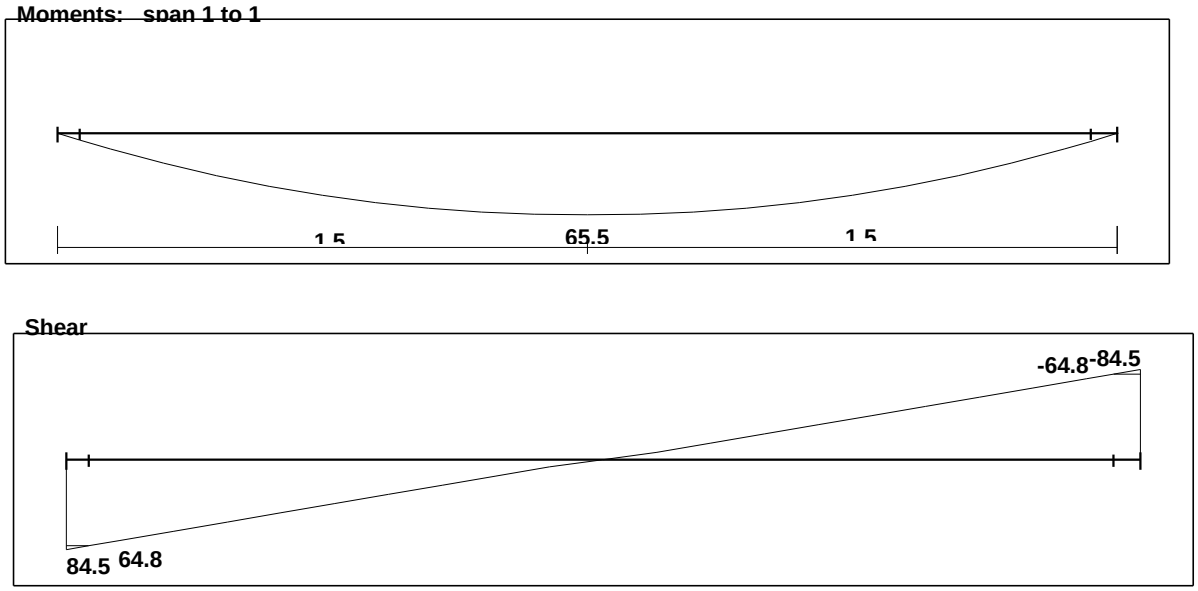

Fig (4-25): Shear and Moment Envelope Diagram of Middle Landing.

4-8-2-1Design of Shear:- (Vu=64.8Kn)

Assume bar diameter ø 14 for main reinforcement

d =h- cover $-\frac{d_b}{2} = 250 - 20 - \frac{14}{2} = 223\ mm$

$V_c = \frac{1}{6}\sqrt{fc'}b_w\ d = = \ \frac{1}{6}\sqrt{24} * 1000 * 223 = 182.1$ Kn

Φ* V_c = 0.75* 182.1 = 136.6Kn> Vu = 64.8Kn**….. No shear reinforcement are required**

4-8-2-2 Design of Bending Moment :- (Mu=65.5Kn.m)

Assume bar diameter ø 14 for main reinforcement

d =h- cover $-\frac{d_b}{2} = 250 - 20 - \frac{14}{2} = 223\ mm$

$R_n = \frac{M_u}{\emptyset bd^2} = \frac{65.5\times10^6}{0.9\times1000\times223^2} = 1.46\ Mpa$

$m = \frac{f_y}{0.85f_c'} = \frac{420}{0.85\times24} = 20.6$

$\rho = \frac{1}{m}\left(1 - \sqrt{1 - \frac{2.m.R_n}{420}}\right) = \frac{1}{20.6}\left(1 - \sqrt{1 - \frac{2\times20.6\times1.46}{420}}\right) = 0.0036$

$A_{s,req}$ = ρ.b.d = 0.0036×1000×223 = 807.12 mm^2

$A_{s,min}$ =0.0018*1000*250 = 450mm^2

$A_{s,req}$ = 807.12 mm^2**…… is control**

Check for Spacing :-

S = 3h = 3*300 =900 mm

$S = 380*(\frac{280}{\frac{2}{3}*420}) - 2.5*20 = 330$

S = 450 mm

S = 330mm **…… is control**

Use ø14@ 15mm ,$A_{s,provided}$= 1026 mm^2>$A_{s,required}$= 807.12 mm^2… Ok

Check for strain:-

a =$\frac{A_{s.f_y}}{0.85b\ f'_c} = \frac{1026\times420}{0.85\times1000\times24} = 21.14\ mm$

c= $\frac{a}{\mathcal{B}_1} = \frac{21.14}{0.85} = 24.87\ mm$

$$\varepsilon_s = 0.003\left(\frac{d-c}{c}\right) = 0.003\left(\frac{223-24.87}{24.87}\right) = 0.024 > 0.005 \ \dots\dots \boldsymbol{0k}$$

lateral or Secondary Reinforcement For Landing :-

$A_{s,req}$= $A_{s,min}$ =0.0018*1000*250 = 450 mm^2

Use ø10 @ 150 mm ,$A_{s,provided}$= 523 mm^2>$A_{s,required}$= 450 mm^2… Ok

4-8-3 Design of Main Landing :-

- ✓ **Determination of Thickness:-**

h_{min} = L/20

h_{min} = 3.20 /20 = 16 cm

Take h = 25 cm

✓ **Load Calculation:-**

Dead Load For middle Landing For 1m Strip:-

No.	Parts of Landing	Calculation	
1	Tiles	23*0.03*1= 0.69Kn/m	
2	Mortar	22*0.03*1= 0.66Kn/m	
4	R.C	25*0.25*1= 8.75 Kn/m	
5	Plaster	22*0.02*1= 0.44Kn/m	
		Sum	10.54 Kn/m

Table (4-7): Dead Load Calculation of Main Landing.

LiveLoadFor Landing For 1m Strip = 5*1 = 5 Kn/m

Reaction From Flight:-

DL = 19.7 Kn/m
LL = 8.25 Kn/m

Total Dead Load = 10.54 + 19.7 = 30.24 Kn/m

Total Live Load = 5 + 8.25 = 13.25 Kn/m

FactoredLoad For Landing :-

$W_U = 1.2 \times 30.24 + 1.6 \times 13.25 = 57.48$ Kn/m

✓ **System of Landing:-**

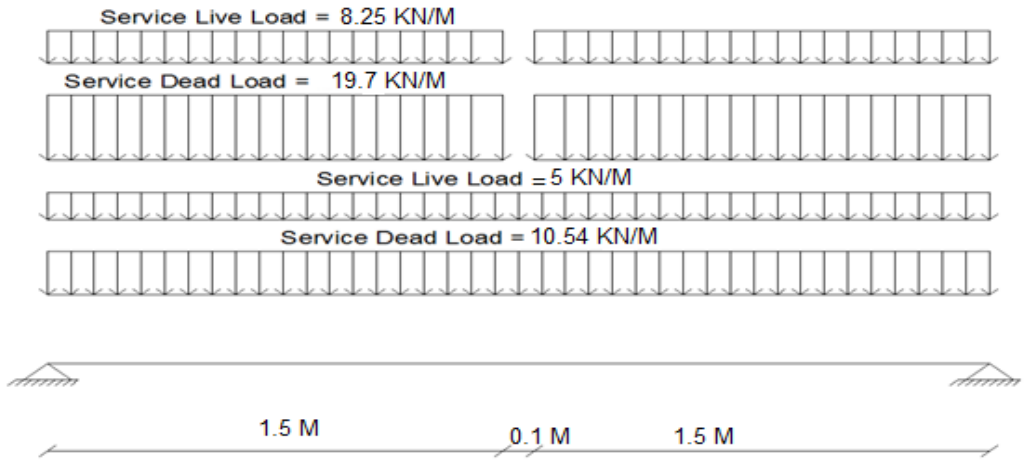

Fig (4-26): Statically System and Loads Distribution of Main Landing.

M o m e n t / S h e a r E n v e l o p e (Factored) Units:kN, meter

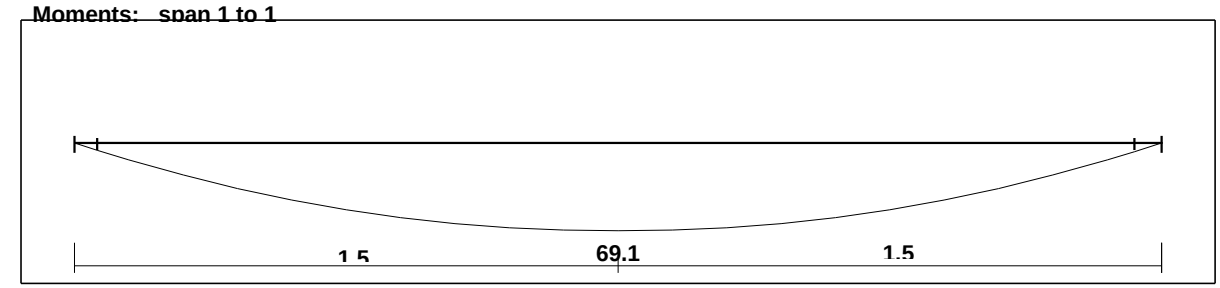

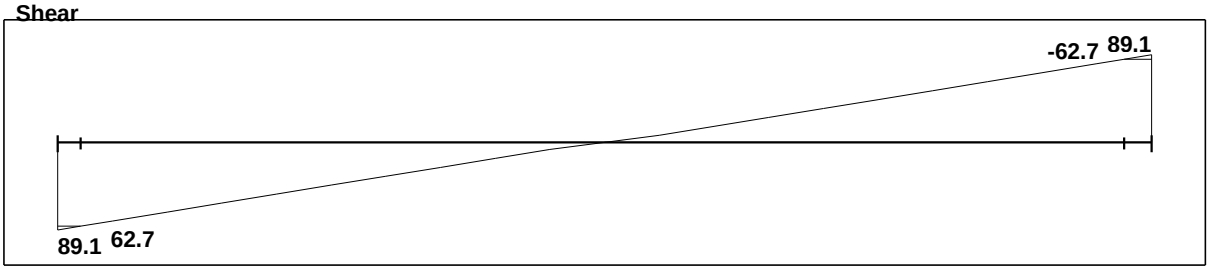

Fig (4-27): Shear and Moment Envelope Diagram of Main Landing.

4-8-3-1 Design of Shear:- (Vu=62.7 Kn)

Assume bar diameter ø 14 for main reinforcement

d =h- cover $-\frac{d_b}{2} = 350 - 20 - \frac{14}{2} = 323\ mm$

$V_c = \frac{1}{6}\sqrt{fc'}b_w\ d = = \ \frac{1}{6}\sqrt{24} * 1000 * 323 = 263.7$ Kn

Φ* V_c = 0.75* 263.7 = 19.8Kn> Vu = 62.7Kn**….. No shear reinforcement are required**

4-8-3-2 Design of Bending Moment :- (Mu=69.1Kn.m)

Assume bar diameter ø 14 for main reinforcement

d =h- cover $-\frac{d_b}{2} = 350 - 20 - \frac{14}{2} = 323\ mm$

$R_n = \frac{M_u}{\emptyset bd^2} = \frac{69.1\times10^6}{0.9\times1000\times323^2} = 0.74\ Mpa$

$m = \frac{f_y}{0.85f_c'} = \frac{420}{0.85\times24} = 20.6$

$\rho = \frac{1}{m}\left(1 - \sqrt{1 - \frac{2.m.R_n}{420}}\right) = \frac{1}{20.6}\left(1 - \sqrt{1 - \frac{2\times20.6\times0.74}{420}}\right) = 0.0018$

$A_{s,req}$ = ρ.b.d = 0.0018×1000×323 = 576.6 mm^2

$A_{s,min}$ =0.0018*1000*350 = 630mm^2

$A_{s,req}$=576.6mm^2<$A_{s,min}$630.0 mm^2**…… is control**

$A_{s,min}$630.0 mm^2**…… is control**

Check for Spacing :-

S = 3h = 3*300 =900 mm

S = 380*($\frac{280}{\frac{2}{3}*420}$) – 2.5*20 = 330

S = 450 mm

S = 330mm **…… is control**

Use ø12@ 15 mm ,$A_{s,provided}$= 753 mm^2>$A_{s,required}$= 630mm^2… Ok

Check for strain:-

a =$\frac{A_{s.f_y}}{0.85b\ f'_c} = \frac{753\times420}{0.85\times1000\times24} = 15.5\ mm$

c= $\frac{a}{\mathcal{B}_1} = \frac{21.14}{0.85} = 18.23\ mm$

$$\varepsilon_s = 0.003\left(\frac{d-c}{c}\right) = 0.003\left(\frac{323-18.23}{18.23}\right) = 0.05 > 0.005\ \ldots\ldots \boldsymbol{0k}$$

lateral or Secondary Reinforcement For Landing :-

$A_{s,req}$= $A_{s,min}$ =0.0018*1000*350 = 630 mm^2

Use ø12 @ 150 mm ,$A_{s,provided}$= 785 mm^2>$A_{s,required}$= 630 mm^2… Ok

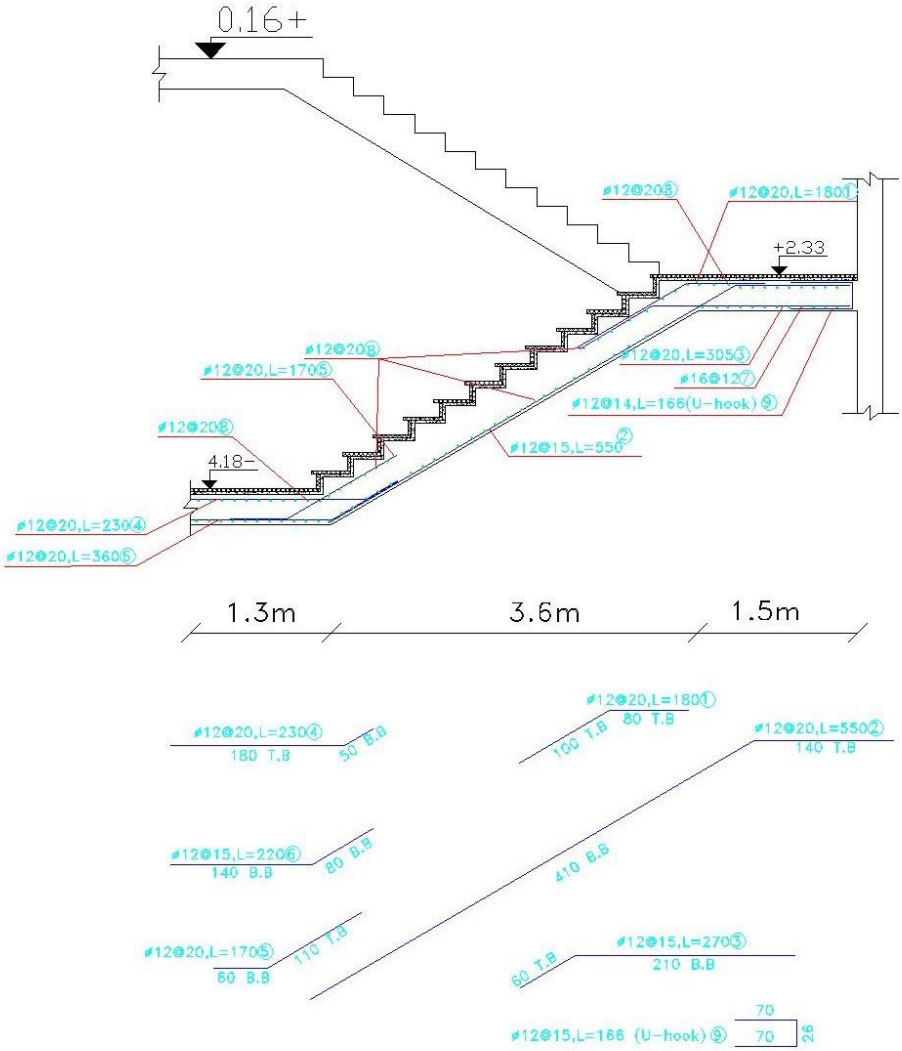

Fig (4-28): Stair Reinforcement Details.

4-9 Design of Column

❖ **Material :-**

⇒ concrete B350 Fc' = 28 N/mm^2

⇒ Reinforcement Steel Fy = 420 N/mm^2

4-9-1 Load Calculation:- (From Column Group E)

Service Load:-

Dead Load =2500KN
Live Load =500 KN

Factored Load:-

P_U = 1.2 ×2500+ 1.6×500 =3800 KN

4-9-2 Dimensions of Column:-

$Assume \rho g = 0.01$

$\phi * Pn = 0.65 \text{ x } 0.8 \times Ag \{0.85\ fc'(1-\rho g) + \rho g * Fy\}$

$3800 * 10\text{^}3 = 0.65 \text{ x } 0.8 \times Ag \{0.85 * 24 (1-0.01) + 0.01 * 420\}$

Ag= 299545 mm2
Assume Rectangular Section
b= 650mm
h = 299545 /650 = 460 mm
select b = 500 mm

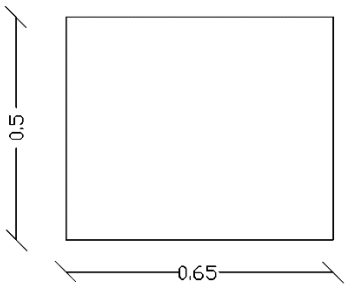

Fig (4-39): Column section

- ✓ **Check Slenderness Parameter:-**

$$\frac{klu}{r} < 34 - 12\frac{M1}{M2} \leq 40$$

Lu: Actual unsupported (Unbraced) length.

K: effective length factor. According to ACI 318-2002 (10.10.6.3) The effective length factor k, shall be permitted to be taken as 1.0.

R: radius of gyration = $\sqrt{\frac{I}{A}}$ ≈0.3 h …….For rectangular section

Lu = 4.45 - 0.35= 4.10m
M1/M2 =1
K=1 for braced frame.

- **about y-axis (b= 0.50 m)**

$$\frac{klu}{r} < 34 - 12\frac{M1}{M2} \leq 40$$

- $\frac{1\times 4.10}{0.3\times 0.50} = 27.3 > 22$

Column Is long About Y-axis

- **about X-axis (h= 0.650m)**

$$\frac{klu}{r} < 34 - 12\frac{M1}{M2} \quad .....ACI-(10.12.2)$$

$\frac{1\times 4.10}{0.3\times 0.650} = 21 < 22$ Then Column Is Short About X-axis

- ✓ **Minimum Eccentricity:-**

$$ey = \frac{Mux}{Pu} = 0$$

$$\min\ ey = 15 + 0.03 \times h = 15 + 0.03 \times 500 = 300mm$$

$$ey = 0.030m$$

- ✓ **Magnification Factor:-**

$$\delta_{ns} = \frac{Cm}{1 - \frac{Pu}{0.75P_c}} \geq 1.0 and \leq 1.4$$

$$Cm = 0.6 + 0.4\left(\frac{M1}{M2}\right) \geq 0.4$$

$$Cm = 0.6 + 0.4 * 1 = 1 \geq 0.4$$

$$P_{cr} = \frac{\pi^2 EI}{(KLu)^2}$$

$$EI = 0.4\frac{E_c I_g}{1+\beta_d}$$

$$E_c = 4700\sqrt{fc'} = 4700 \times \sqrt{28} = 24870.6Mpa$$

$$\beta_d = \frac{1.2DL}{Pu} = \frac{1.2*(2500)}{3800} = 0.940 < 1$$

$$I_g = \frac{b \times h^3}{12} = \frac{0.65 \times 0.50^3}{12} = 0.00677m^4$$

$$EI = \frac{0.4 \times 24870 \times 0.00677}{1+0.940} = 34.715MN.m^2$$

$$P_{cr} = \frac{\pi^2 * 34.715}{(1*4.1)^2} = 20.38MN$$

$$\delta_{ns} = \frac{1}{1 - \frac{3800}{0.75*20380}} = 1.31 \geq 1.0 and \leq 1.4$$

✓ **Interaction Diagram:-**

$$ey = e_{\min} \times \delta_{ns} = 0.030 \times 1.33 = 0.0395m$$

$$\frac{ey}{h} = \frac{0.0395}{0.65} = 0.06$$

$$\frac{\gamma}{h} = \frac{500 - 2*40 - 2*10 - 25}{500} = 0.75$$

From the interactio n diagram chart

from chart A9 - b for $\frac{\gamma}{h} = 0.75 \rightarrow \rho g = 0.01$

Select reinforcem ent

$$\text{Ast} = \rho g \times Ag = 0.01 \times 650 * 500 = 3250mm^2$$

Select $14\,\phi 18\ with\ As = 3563mm^2 > \text{Ast} = 3250mm^2$.

from chart A9 - b for $\frac{\gamma}{h} = 0.75 \rightarrow \rho g = 0.01$

Select reinforcem ent

$$\text{Ast} = \rho g \times Ag = 0.01 \times 650 * 500 = 3250mm^2$$

Select $14\,\phi 18\ with\ As = 3563mm^2 > \text{Ast} = 3250mm^2$.

4-9-3 Design of the Stirrups:-

The spacing of ties shall not exceed the smallest of :-

$$spacing \le 16 \times d_b = 16 \times 1.80 = 28.8\ cm$$

$$spacing \le 48 \times d_s = 48 \times 1.0 = 48\ cm$$

$$spacing \le least\ \text{dim} = 50\ cm$$

$Use \phi 10 @ 20\ cm$

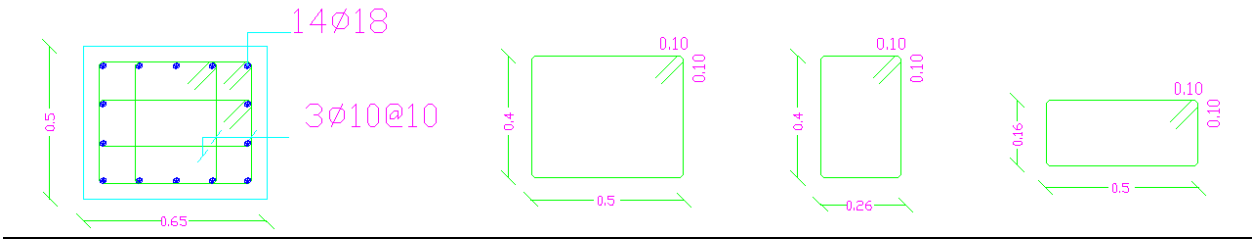

Figure (4-30): Column Reinforcement Details.

4-10 Design of Shear Wall

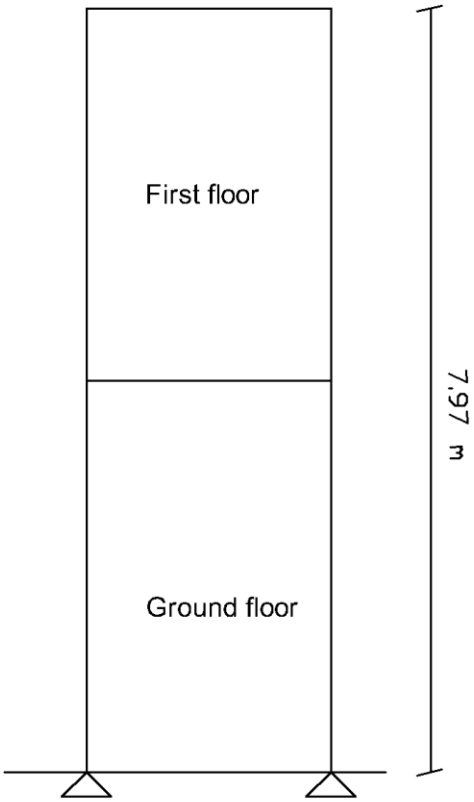

Figure (4-31): Shear Wall.

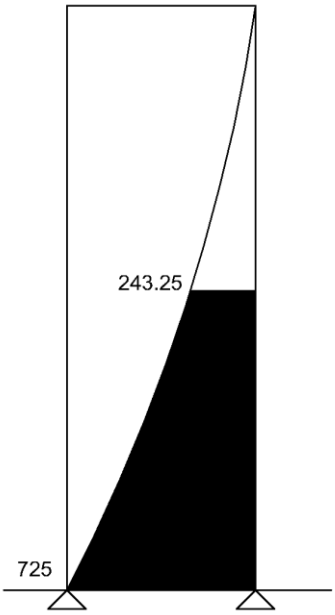

Figure (4-32): Shear Diagram of Shear Wall.

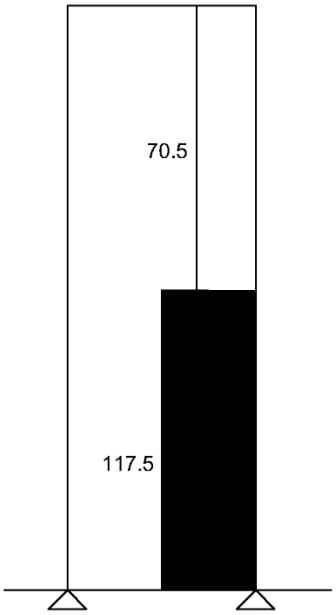

Figure (4-33) Moment Diagram of Shear Wall.

✓ **Material and Sections:- (From Shear Wall 2)**

⇒ concrete B350 Fc' = 28 N/mm^2

⇒ Reinforcement Steel Fy = 420 N/mm^2

⇒ Shear Wall Thickness h = 30 cm

⇒ Shear Wall Width Lw = 1.50m

⇒ Shear Wall Height Hw = 7.97m

4-10-1 Design of Horizontal Reinforcement:-

$$\sum Fx = Vu = 690.5\ KN$$

The critical Section is the smaller of:

$$\frac{lw}{2} = \frac{1.45}{2} = 0.725m.....Control$$
$$\frac{hw}{2} = \frac{7.55}{2} = 3.775m$$
$$storyheigh(Hw) = 4.1m$$

$$d = 0.8 \times Lw = 0.8 \times 1.45 = 1.16m$$

$$\emptyset V_{nmax} = \emptyset \frac{5}{6}\sqrt{f_c'}hd$$
$$= 0.75 * 0.83 * \sqrt{28} * 300 * 1160 = 1146.3\ KN > V_u = 117.5KN$$

$V_c$is the smallest of :

$$1 - V_c = \frac{1}{6}\sqrt{f_c'}hd = \frac{1}{6}\sqrt{28} * 300 * 1160 = 306.9KN$$
$$2 - V_c = 0.27\sqrt{f_c'}hd + \frac{N_u d}{4l_w} = 0.27\sqrt{28} * 300 * 1160 + 0 = 497.19KN$$

$$3-\ V_c = \left[0.05\sqrt{f_c} + \frac{l_w\left(0.1\sqrt{f_c'} + 0.2\frac{N_u}{l_w h}\right)}{\frac{M_u}{V_u} - \frac{l_w}{2}}\right] hd$$

$$3-\ V_c = \left[0.05\sqrt{28} + \frac{1.45\left(0.1\sqrt{28}+0\right)}{4.72}\right] 300 * 1.16\ = 148.64KN\ \ \ldots\ldots\text{Control}$$

$$M_u = 243.25 + 117.5 * (4.1 - 0.725) = 640KN.m$$

$$\frac{M_u}{V_u} - \frac{l_w}{2} = \frac{640}{117.5} - \frac{1.45}{2} = 4.72$$

Vc =148.64KN

$\emptyset * vc + \emptyset vs = vu$
$\emptyset * vs$=vu-$\emptyset * vc$
Vs=vu/$\emptyset - vc$
Vs=117.5/0.75-148.64= 8kn **need reinforcement**

$$\frac{A_{vh}}{S_2} = \frac{v_s}{f_y\ d} = \frac{8}{400 * 3600} = 0.000005m2/m$$

$$\rho_t = \frac{A_{vh}}{S_2 * h} = \frac{0.000005}{0.3} = 0.00001 < 0.0025$$

- Maximum spacing is the least of :

$\frac{Lw}{5} = \frac{1450}{5}$ = 290 mm……. Control
3*h = 3*300 = 900mm

450 mm

Select ∅10 ,tow layers

Sh=157/0.75=209.33

$$\rho_t = \frac{A_{vh}}{S_2 * h} = \frac{2 * 78.5}{S_2 * 300} = 0.0025$$

Sh=209.33

Select Sh=200mm≤Smax= 290 mm.

4-10-2 Design of Vertical Reinforcement:-

$$\frac{A_{vv}}{S_v} = 0.0025 + 0.5\left(2.5 - \frac{h_w}{Lw}\right)(\rho_t - 0.0025) \geq 0.0025$$

$$\frac{h_w}{Lw} = \frac{7.55}{1.45} = 5.2$$

$$for\ this\ wall\ with\ \frac{h_w}{Lw} \geq 2.5, \rho_t = 0.0025$$

- Maximum spacing is the least of :

$$\frac{Lw}{3} = \frac{1450}{3} = 483.3 \text{ mm}$$

3*h = 3*300 = 900mm

450 mm ……. Control

Use ϕ10/200 mm for two layers

4-10-3 Design of Bending Moment:-

$$A_{st} = \left(\frac{1450}{200}\right) * 2 * 79 = 1145\ mm^2$$

$$w = \left(\frac{A_{st}}{L_w h}\right)\frac{f_y}{f_c'} = \left(\frac{1145}{1450 * 300}\right)\frac{420}{28} = 0.0395$$

$$\alpha = \frac{P_u}{l_w h f_c'} = 0$$

$$\frac{C}{l_w} = \frac{w + \alpha}{2w + 0.85\beta_1} = \frac{0.0395 + 0}{2 * 0.0395 + 0.85 * 0.85} = 0.04928$$

$$\emptyset M_n = \emptyset\left[0.5 A_{st} f_y l_w (1 + \frac{P_u}{A_{st} f_y})(1 - \frac{c}{l_w})\right]$$

$$= 0.9[0.5 * 1145 * 420 * 1450(1+0)(1-0.04928)] = 298.3KN$$
$$\leq 640KN.m$$

Not OK

Try **ϕ14/150 mm for two layers**

$$A_{st} = \left(\frac{1450}{150}\right) * 2 * 154 = 2977mm^2$$

$$w = \left(\frac{A_{st}}{L_w h}\right)\frac{f_y}{f_c'} = \left(\frac{2977}{1450 * 300}\right)\frac{420}{28} = 0.103$$

$$\alpha = \frac{P_u}{l_w h f_c'} = 0$$

$$\frac{C}{l_w} = \frac{w+\alpha}{2w + 0.85\beta_1} = \frac{0.103+0}{2 * 0.103 + 0.85 * 0.85} = 0.111$$

$$\emptyset M_n = \emptyset\left[0.5A_{st}f_y l_w(1+\frac{P_u}{A_{st}f_y})(1-\frac{c}{l_w})\right]$$

$$= 0.9[0.5 * 2977 * 420 * 1450(1+0)(1-0.111)] = 725KN \geq 640KN.m$$

4-11Design of Footing

✓ **Material :-**

⇒ concrete B350 Fc' = 28 N/mm^2

⇒ Reinforcement Steel Fy = 420 N/mm^2

✓ **Load Calculations :- (From Column Group B)**

Dead Load = 2500 Kn , Live Load = 500Kn

Total services load = 2500 + 500 = 3000 Kn

Total Factored load = 1.2*2500 + 1.6*500 = 3800 Kn

Column Dimensions (a*b) = 65*50 cm

Soil density = 18 Kg/cm3

Allowable Bearing Capacity = 400 Kn/m2

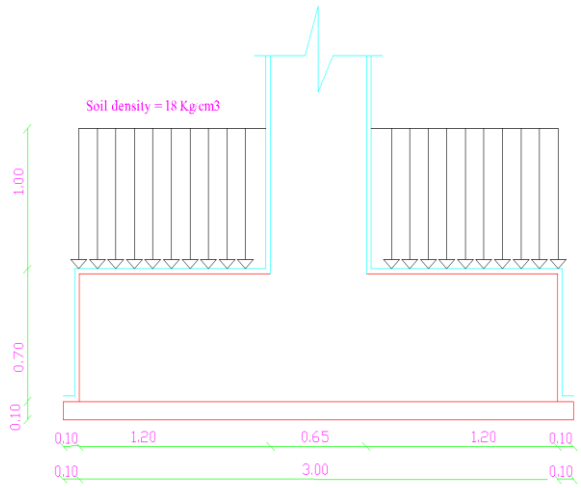

Figure (4-34):Footing Section.

Assume h = 70cm

$q_{net-allow}$ = 400 – 25*0.7 – 18*1.0– 25*0.6 = 349.5kn/m2

- ✓ **Area of Footing :-**

$$A = \frac{Pt}{q_{net-allow}} = \frac{3000}{349.5} = 8.58\ m^2$$

Assume Square Footing

B required = 3 m

Select B = 3 m

- ✓ **Bearing Pressure :-**

q_u = 3800/3*3 = 422 Kn/m^2

4-11-1 Design of One Way Shear Strength :-

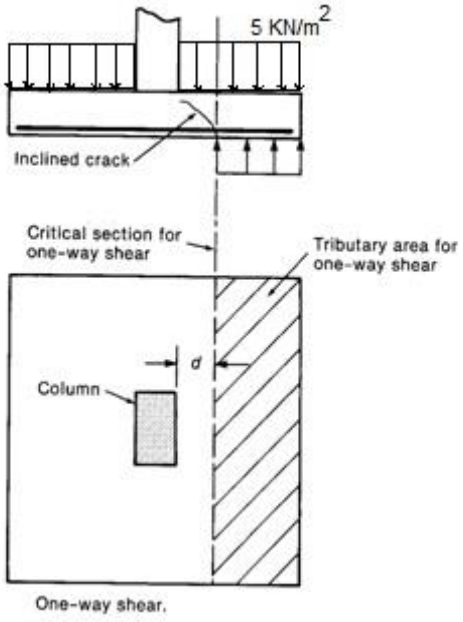

Figure (4-35) :Critical Section at Distance (d) From The Face of Column

Assume h = 60cm , bar diameter ø 14 for main reinforcement and 7.5 cm Cover

d = 700 – 75 – 14 =611 mm

$Vu = q_u * \left(\frac{B-a}{2} - d\right) * L$

$Vu = 422.0 * \left(\frac{3.0-0.50}{2} - 0.611\right) * 3 = 809Kn$

$$\phi.Vc = \phi.\frac{1}{6} * \sqrt{fc'} * b_w * d$$

$$\phi.Vc = 0.75 * \frac{1}{6} * \sqrt{28} * 3000 * 611 = 1212Kn$$

$$\phi.Vc = 1212KN > Vu = 809Kn$$

$\therefore$ *Safe*

4-11-2 Design of Two Way Shear Strength :-

$Vu = Pu - FR_b$

$FR_b = q_u * area\ of\ critical\ \text{section}$

$Vu = 3800 - 422[(0.5+0.611)*(0.65+0.611)] = 3209Kn$

The punching shear strength is the smallest value of the following equations:-

$$\phi.V_c = \phi.\frac{1}{6}\left(1+\frac{2}{\beta_c}\right)\sqrt{f_c'}\,b_o d$$

$$\phi.V_c = \phi.\frac{1}{12}\left(\frac{\alpha_s}{b_o/d}+2\right)\sqrt{f_c'}\,b_o d$$

$$\phi.V_c = \phi.\frac{1}{3}\sqrt{f_c'}\,b_o d$$

Where:-

$$\beta_C = \frac{Column\ Length\ (a)}{Column\ Width\ (b)} = \frac{65}{50} = 1.3$$

b_o = Perimeter of critical section taken at (d/2) from the loaded area

$b_o = 2*(61.1+50)+2*(61.1+65) = 474.4cm$

α_s = 40 for interior column

$$\phi.V_C = \phi.\frac{1}{6}\left(1+\frac{2}{\beta_c}\right)\sqrt{f_c'}\,b_o d = \frac{0.75}{6}*\left(1+\frac{2}{1.3}\right)*\sqrt{28}*4744*611 = 4866.8Kn$$

$$\phi.V_C = \phi.\frac{1}{12}\left(\frac{\alpha_s}{b_o/d}+2\right)\sqrt{f_c'}\,b_o d = \frac{0.75}{12}*\left(\frac{40*611}{4744}+2\right)*\sqrt{28}*4744*611 = 6855.8Kn$$

$$\phi.V_C = \phi.\frac{1}{3}\sqrt{f_c'}\,b_o d = \frac{0.75}{3}*\sqrt{28}*4744*611 = 3834.5Kn$$

ΦVc =3834Kn>Vu=3209Kn

4-11-3 Design of Bending Moment :-

Critical Section at the Face of Column

FR = $q_u * \left(\frac{B-a}{2}\right) * L$ = 422 * $\left(\frac{3.0-0.50}{2}\right)$ *3 =1582.5Kn

Mu = 1582.5* 1.25/2 = 989 Kn.m

$R_n = \frac{M_u}{\emptyset b d^2} = \frac{989\times10^6}{0.9\times3000\times611^2} = 0.98\ Mpa$

$m = \frac{f_y}{0.85 f_c'} = \frac{420}{0.85\times28} = 17.65$

$\rho = \frac{1}{m}\left(1-\sqrt{1-\frac{2.m.R_n}{420}}\right) = \frac{1}{17.6}\left(1-\sqrt{1-\frac{2\times17.65\times0.98}{420}}\right) = 0.00239$

$A_{s,req}$ = ρ.b.d = 0.00239×3000×611 = 4381.3 mm^2

$A_{s,min}$ = 0.0018*3000*700 = 3780 mm^2

$A_{s,req}$ = 4381.3mm^2 **…… is control**

Check for Spacing :-

S = 3h = 3*70 = 210cm

S = 380*$(\frac{280}{\frac{2}{3}*420})$ – 2.5*75 = 192.5 cm

S = 45 cm **…… is control**

Use 18ø18 in Both Direction, $A_{s,provided}$= 4581mm^2>$A_{s,required}$= 4381.3 mm^2… Ok

Check for strain:-

a = $\frac{A_{s.f_y}}{0.85b\ f_c'} = \frac{4581\times420}{0.85\times3000\times28} = 26.95\ mm$

c = $\frac{a}{\mathcal{B}_1} = \frac{26.95}{0.85} = 31.7\ mm$

$$\varepsilon_s = 0.003\left(\frac{d-c}{c}\right) = 0.003\left(\frac{611-31.7}{31.7}\right) = 0.054 > 0.005 \ \ldots\ldots \mathbf{0k}$$

4-11-4 Design of Dowels :-

Load Transfer In Footing :-

$$\Phi Pn.b = \Phi(0.85\, fc' A_1 \times \sqrt{\frac{A_2}{A_1}})$$

$A_1 = 50 * 65 = 0.325\ m^2$

$A_2 = 300* 300 = 9.0\ m^2$

$$\sqrt{\frac{A_2}{A_1}} = \sqrt{\frac{9.0}{.325}} = 5.26 > 2 \ldots\ldots\ldots\ldots\ldots \sqrt{\frac{A_2}{A_1}} = 2$$

$$\Phi Pn.b = 0.65 \times (0.85 \times 28 \times 325 \times 2) = 10055 Kn$$

$$\Phi Pn = 10055 > Pu = 3800 \ldots\ldots\ldots ok$$

No Need For Dowels

Load Transfer In Column :-

$$\Phi Pn.b = 0.65 \times (0.85 \times 28 \times 325) = 5027 Kn$$

$$\Phi Pn = 5027 > Pu = 3800 kn \ldots\ldots\ldots ok$$

No Need For Dowels

As,min = 0.005 * Ac = 0.005 * 500 * 650 = 1625 mm2

Use 12ø14, $A_{s,provided}$= 1848 mm^2>$A_{s,required}$= 1625 mm^2… Ok

4-11-5 Development Length In Footing :-

Tension Development Length In Footing :-

$$Ld_{T\ req} = \frac{9}{10} * \frac{F_y}{\lambda\sqrt{f_c}} * \frac{\psi_e \psi_s \psi_t}{\frac{ktr+cb}{db}} * db > 300\text{mm}$$

$$Ktr = 0\ (Nostripes)$$

$cb = 75 + \frac{16}{2} = 83mm \;\; Or \; cb = \frac{150}{2} = 75\ mm$

$\frac{ktr + cb}{db} = \frac{0 + 75}{16} = 4.68 > 2.5$

$\frac{ktr + cb}{db} = 2.5$

$Ld_{T\ req} = \frac{9}{10} * \frac{420}{1*\sqrt{28}} * \frac{1*1*0.8}{2.5} * 16 = 365.75\ mm$> 300mm

$Ld_{T\ available} = \frac{1900-500}{2}$ -75= 625 mm

$Ld_{T\ available}$ = 625 mm >$ld_{req} = 395.054\ mm$**…….. OK**

Compression Development Length In Footing :-

$Ld_{Creq} = \frac{0.24*Fy*dB}{\sqrt{24}}$> 0.043*Fy*dB >200mm

$Ld_{Creq} = \frac{0.24*420*16}{\sqrt{28}}$ = 304.8> 0.043*420*16 = 288.96>200mm

Ld_{Creq}= 304.8 mm

$Ldc_{available}$= 600 – 75 – 16 – 16 = 493mm >Ld_{Creq}= 304.8 mm **…….. Ok**

Lap Splice of Dowels In Column :-

Lsc = 0.071×fy×db = 0.071×420 ×16 = 477.12 mm > 300 mm

Select Lsc = 500 mm

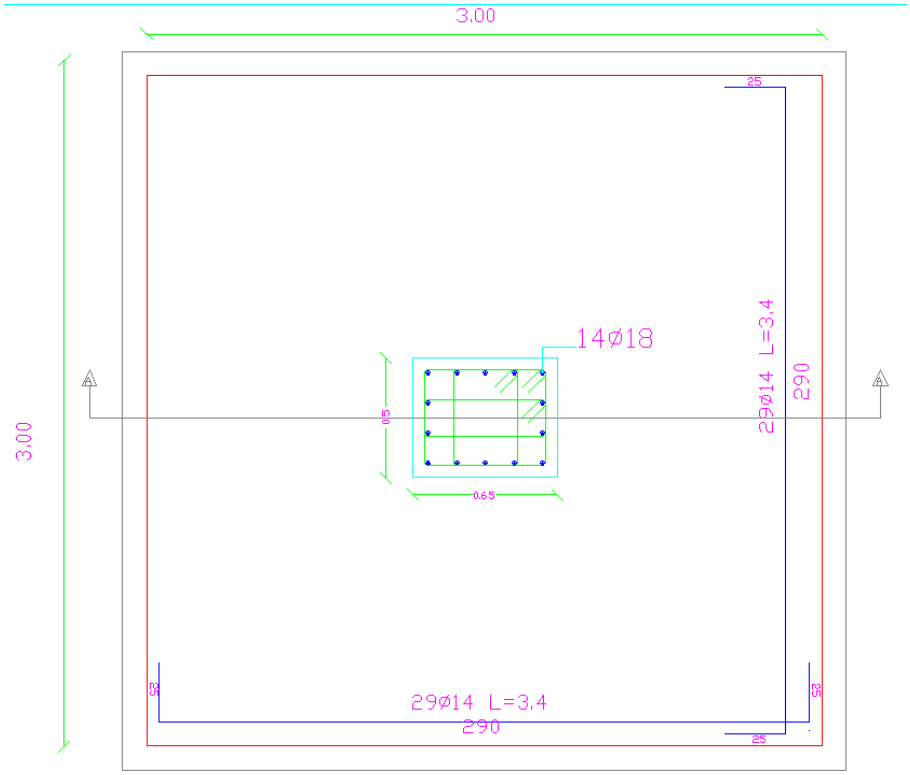

Figure (4-36): Footing Reinforcement Details.

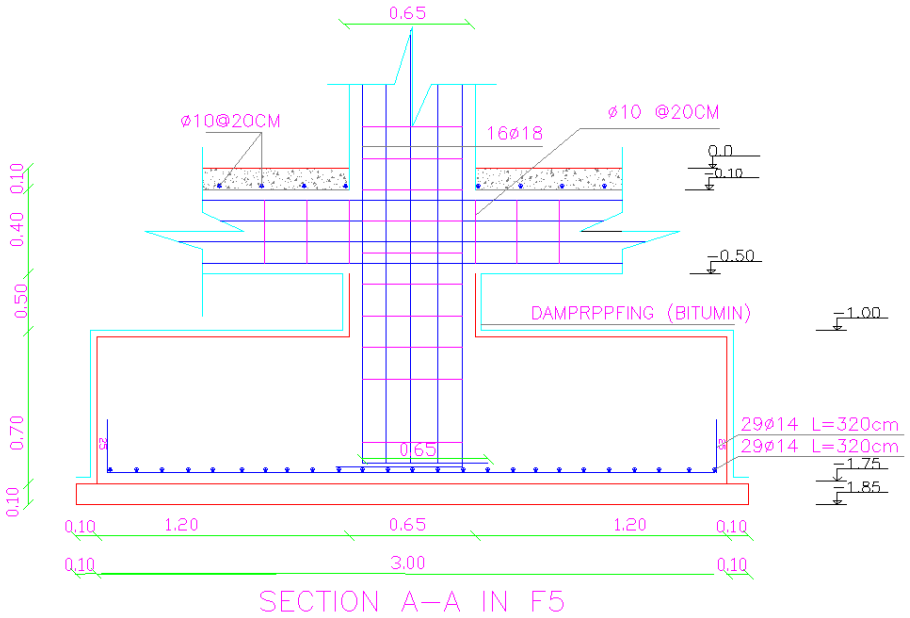

Figure (4-37) : Section from Footing Reinforcement Details.