PPU College Of Engineering and Technology
The Home of Competent Engineers and Researchers

Electrical and Computer Engineering Department

Biomedical Engineering Program

Bachelor Thesis

Graduation Project

Wheelchair Movements Controlled by Voice Commands

Project Team
Isra' Idrees
Nissrin Qutenah
Raja' Shaheen

Project Supervisor
Eng. Ali Amro

Hebron – Palestine

May, 2012

Abstract

A voice controlled wheelchair system is a project which aims to provide the paralysis people with wheelchair that can be controlled easily Joystick or any mechanical controlling system.

The requirement led to understand the traditional wheelchair and replace the mechanical controller with specific controllers that can translate the voice signal to motor controlling signals.

This project includes the idea of sending the voice signals by microphone through a DSB kit to be processed and transformed into a pulse signals, then it will passes to PIC microcontroller, which it suppose to turn it to special movement.

منخص فكرة المشروع

تم اختراع الكرسي المتحرك في أطواره الأولى(المتحرك يدوياً) للتسهيل على من فقد نعمة السيرو فقلل من اعتماده‍م على غيرهم في بعض شؤونهم، توالت التطورات فكانت كل مرة تزيد بالمقدار الذي يسمح بمزيد من التسهيلات، فكان الكرسي المتحرك كهربائيا – مما سمح بالحرية الشخصية – و جاءت من هنا تحويل الحركة الالية في الكرسي الى حركة باستخدام الصوت، تساعد من كان لديه مشاكل في تحريك اليدين اضافة الى القدمين.

هذا المشروع قائم على فكرة تحويل الحركة اليدوية للجهاز الالي في الكرسي الى حركة صوتية بديلة، تعين مستعمل الكرسي في التحرك بالاتجاهات الاربع عن طريق اوامر صوتية يتلقاها المايكروفون و يتم ارسالها الى ال DSP KIT لتقوم بتحليل الامر المعطى و التحكم به ليقوم بتحريك الكرسي بناء على ذلك الامر.

اهداء ...

بدأنا بأكثر من يد و قاسينا أكثر من هم و عانينا الكثير من الصعوبات، و ها نحن اليوم و الحمد لله نطوي سهر الليالي و تعب الأيام و خلاصة مشوارنا بين دفتي هذا العمل المتواضع.

الى منارة العلم و الأمام المصطفى الى الامي الذي علم المتعلمين، الى سيد الخلق الى رسولنا الكريم سيدنا محمد صلى الله عليه و سلم.

الى الينبوع الذي لا يمل من العطاء، الى من حاكت سعادتي بخيوط منسوجة من قلبها الى والدتي العزيزة. الى من سعى و شقى لأنعم بالراحة و الهناء الذي لم يبخل بشيء من أجل دفعي في طريق النجاح الذي علمني أن ارتقي سلم الحياة بحكمة و صبر الى والدي العزيز. الى من حبهم يجري في عروقي و يلهج بذكراهم فؤادي الى اخواتي و اخواني.

الى من سرنا سويا و نحن نشق الطريق معا نحو النجاح و الابداع، الى من تكاتفنا يدا بيد و نحن نقطف زهرة تعلمنا الى صديقاتي و زميلاتي.

الى من علمونا حروفا من ذهب من درر و عبارات كم اسمى و اجل العبارات في العلم الى من صاغوا لنا من علمهم حروفا و من فكرهم منارة تنير لنا مسيرة العلم و النجاح، الى اساتذتنا الكرام.

Acknowledgement

This graduation project has been supported by the Deanship of Graduate Studies and Scientific Research through "Distinguished Graduation Projects Fund"

We would like to express our gratitude for everyone who helped us during the graduation project starting with endless thanks for our supervisor Eng. Ali A Amro, who didn't keep any effort in encouraging us to do our best, providing our group with valuable information and advices to be better each time.

Thanks are extended to all instructors and engineers who helped us during the first stages of our project.

We also want to thank:

1) Dr. Ramzi Al Qawasmeh.
2) Eng. Baha' Al Wohoosh.
3) Eng. Hussain Amro.
4) Dr. Mohammad Amro.
5) Mohammad Al Qiesi.
6) Eng. Shehdah Zahdeh.
7) Eng. Naseem Qtate.
8) Biomedical Engineering Department at Al Ahli Hospital.

Finally, we would like to thank our parents for their endless love, trust, encouragement, and support throughout our lives.

Project Outline

Chapter six Results and Conclusion 40

List of Figures

List of Tables

List of Equations

1

Chapter One
Introduction

1.1 Introduction.

1.2 Project Objectives.

1.3 Project Importance.

1.4 Literature Review.

1.5 Economical Study

1.6 Time Schedule.

Chapter One

Thesis Overview

1.1 Introduction

With increased mobility impairments and diseases that causes paralysis these days a new technologies is needed to help those who have difficulties with moving and transferring from one place to another, from here came the idea of designing a wheelchair that controlled by voice commands in order to give these people some help.

1.2 Project Objectives

1) Designing a tool that helps the paralyzed people in their movement .
2) Build a speaker dependent system that receives several voice signals and translate them to wheelchair control signals.

1.3 Project Importance

This project will help a lot of paralyzed people in moving freely and make their lives easier, which can also help them communicate with the outer world without any help from others.

1.4 Literature review

The electric-powered wheelchair was invented by George Klein who worked for the National Research Council of Canada, to assist injured veterans during World War II.

George Klein wheelchair were developed through years in different ways to accommodate different types of disabilities. Those with partial paralysis will be able to move more than those with total paralysis and wheelchair companies have created products to accommodate these differences. This enables more individuals to have a little more freedom than they would normally have. Still, users with different conditions have to learn to control their chairs in different ways.

These techniques include joy stick controller for those who can move their hands, head switches controller for those who can't move their hands so they move their head instead, sip-and-puff controllers, worked by blowing into a sensor for those with total paralysis and there is studies in moving wheelchairs by eye movements . While in this project the control method used is by voice commands.

1.5 Economical Studies

The following table represents the costs of the main components

The total cost for this project is 461 $, these divided on:

Table 1.1 Cost Table

Cost	Components
78 $	Car Batteries
83 $	Two Sensors
300 $	Circuit Parts

١.6 Time Schedule

The time plan, represents the main stages of the establishing the project, is divided into the two semesters as shown in the following tables

Table 1.2 Time Scheduled Table for the First Semester

T1	Project Definition	1 Week
T2	Collecting data	11 Weeks
T3	Analysis	7 Weeks
T4	Theoretical calculation	4 Weeks
T5	Documentation	10 Weeks
T6	Prepare for presentation	2 Weeks

The time of the introduction to project is scheduled over 16 weeks, table 2 shows how the work was scheduled over this time:

Table 1.3 Time Plan Table

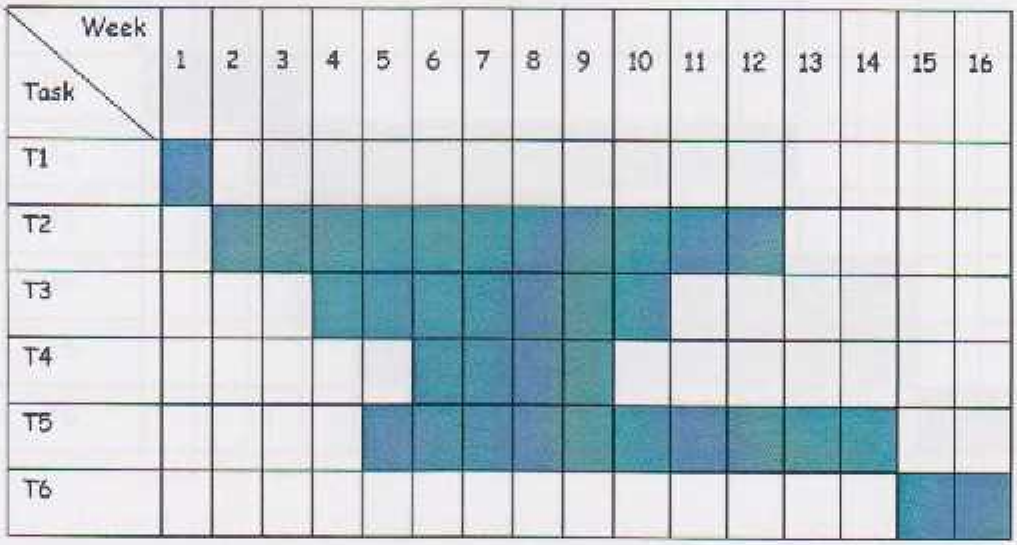

Week Task	1	2	3	4	5	6	7	8	9	10	11	12	13	14	15	16
T1	▨															
T2		▨	▨	▨	▨	▨	▨	▨	▨	▨	▨	▨				
T3				▨	▨	▨	▨	▨	▨	▨						
T4						▨	▨	▨	▨							
T5					▨	▨	▨	▨	▨	▨	▨	▨	▨	▨		
T6															▨	▨

The following tables defines the main tasks in the project:

Table 1.4 Time Scheduled Table for the Second Semester

T1	Collecting data	3 Week
T2	Design	10 Weeks
T3	Analysis	5 Weeks
T4	Building and testing the system	8 Weeks
T5	Documentation	10 Weeks
T6	Prepare for presentation	2 Weeks

The time of the introduction to project is scheduled over 16 weeks, table 4 shows how the work was scheduled over this time:

Table 1.5 Time Plan Table

Week Task	1	2	3	4	5	6	7	8	9	10	11	12	13	14	15	16
T1	■	■	■													
T2			■	■	■	■	■	■	■	■	■	■				
T3				■	■	■	■	■								
T4							■	■	■	■	■	■	■	■		
T5					■	■	■	■	■	■	■	■	■	■		
T6															■	■

2

Chapter Two Physiological Background

2.1 Introduction.

2.2 Spinal Cord Anatomy.

2.3 Spinal Cord Paralysis.

  2.3.1 Causes of Spinal Cord Paralysis

  2.3.2 Level and Degree of Injury

    2.3.2.1 Complete Injury

    2.3.2.2 Incomplete Injury

Chapter Two

Physiological Background

2.1 Introduction

Before starting the design of the voice controlled wheelchair, and understanding of what is the main causes of paralysis is necessary. This requires some background knowledge about the physiology of the spinal cord and its injuries.

This chapter gives a rough idea about the anatomy of the spinal cord, spinal cord paralysis, causes of these paralysis and the level and degree of injury.

2.2 Spinal Cord Anatomy

The spinal cord is the largest nerve in the body, and it is comprised of the nerves which act as the communication system for the body. The nerve fibers within the spinal cord carry messages to and from the brain to other parts of the body. Thus, the spinal cord can be compared to a telephone cable which connects the central office (brain) to the individual homes. Because of its important role in the nervous system, the spinal cord is surrounded by protective bone segments, called the vertebral column. The vertebral column is comprised of eight cervical vertebrae, twelve thoracic vertebrae, 5 lumbar vertebrae and five sacral vertebrae as shown in Fig [2.1]. As the body grows, the vertebral column grows more in length than the spinal cord, causing a discrepancy between the location of the spinal cord segments and the vertebral column segments, particularly in the lower part of the spinal system. For this reason, there is often a discrepancy between the level of vertebral fracture and the level of spinal cord injury.

The term spinal cord injury refers to any injury of the neural elements within the spinal canal. Spinal cord injury can occur from either trauma or disease to the vertebral column or the spinal cord itself. Most spinal cord injuries are the result of trauma to the vertebral column causing a fracture of the bone, or tearing of the ligaments with displacement of the bony column producing a pinching of the spinal cord. The majority of broken necks and broken backs, or vertebral fractures, do not cause any spinal cord damage; however, in 10-14% of the cases where a vertebral trauma has occurred, the damage is of such severity it results in damage to the spinal cord.

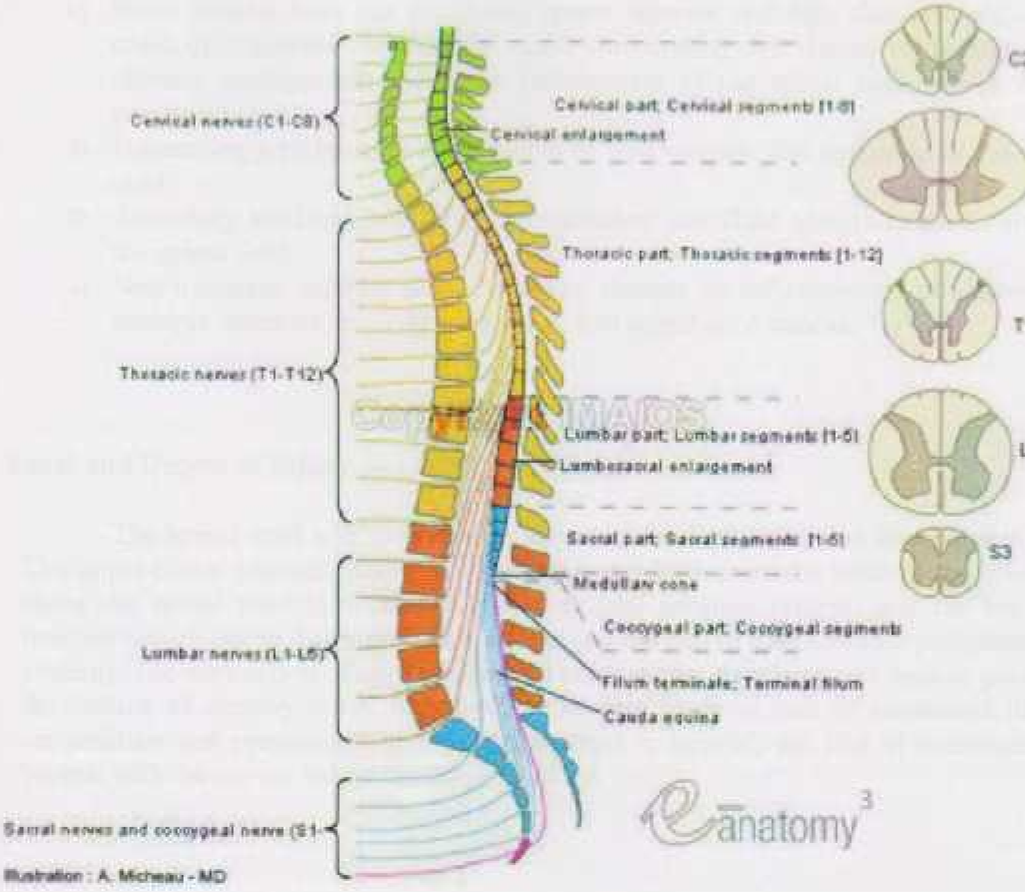

Figure 2.1 Spinal Cord [4]

2.3 Spinal Cord Paralysis

Spinal cord paralysis ca be defined as the damage of the spinal cord that causes a partial or total loss of muscle and sensory functions. The spinal cord does not need to be severed for paralysis to occur. The location of the spinal cord injury dictates what muscle and sensory functions are affected and the degree of injury (complete or incomplete) dictates how much (if any) function remains.

2.3.1 Causes of Spinal Cord Paralysis

As discussed in the previous sections, the spinal cord is made up of a bundle of nerves that carry information to and from the muscles, organs and tissues of the body to the brain. It is protected by 33 vertebrae, and by soft tissue. Injury to the spinal cord or surrounding tissues can result in spinal cord paralysis. The mechanisms of spinal cord injury are:

1) Blunt trauma from car accidents, sports injuries and falls that fracture, dislocate, crush or compress vertebrae or cause surrounding soft tissues to damage , thereby causing impingement syndrome (entrapment of the spinal cord, which can cause paralysis) .
2) Penetrating injuries such as gunshots or stab wounds that penetrate or cut the spinal cord .
3) Secondary swelling, bleeding, inflammation and fluid accumulation in and around the spinal cord.
4) Non-traumatic injuries from infection, disease or inflammatory processes such as multiple sclerosis, transverse mellitus, and spinal cord tumors.

2.3.2 Level and Degree of Injury

The spinal cord and its branches are comprised of upper and lower motor neurons. The upper motor neurons carry messages back and forth from the brain to the spinal nerves along the spinal tract (also known as the central nervous system) and the lower motor neurons branch out to the limbs, trunk organs and the rest of the body (the peripheral nervous system). The destruction of nerve fibers that carry motor signals causes muscle paralysis and destruction of sensory nerve fibers, which in turn leads to loss of sensations like touch, temperature and pressure. When the spinal cord is injured, the line of communication is broken with the nerves below the level of injury.

2.3.2.1 Complete Injury

Complete cervical spine (C_1-C_8) injuries cause quadriplegia, which is total paralysis of the upper and lower extremities.

1) C_1-C_3 patients can speak, swallow and control head movement but their arms and legs are completely paralyzed and they require a mechanical ventilator to breathe.
2) C_4 patients may be able to move their neck and shoulders and have difficulty breathing that may or may not require a ventilator, but their arms and legs are completely paralyzed.
3) C_5 patients cannot move their trunk or legs and may have difficulty breathing but have some movement of the arms and can bend their elbows and move their shoulders.
4) C_6 patients cannot move their trunk or legs and may have difficulty breathing but have some movement of the arms and can bend their elbows and move their shoulders and extend the wrists.
5) C_7-C_8 patients cannot move their trunk or legs and may experience weakness in breathing but can bend and straighten their elbows and have some use of their fingers.

Complete thoracic (T_1-T_{12}), lumbar (L_1-L_5) and sacral (S_1-S_5) injuries cause paraplegia, or total paralysis of the lower extremities.

1) T_1-T_9 patients are completely paralyzed in the lower body and legs. Additionally, patients may have some difficulty breathing — as well as differing degrees of trunk mobility, depending on the level of injury.
2) T_{10}-L_1 patients are completely paralyzed in the lower body and legs but have good trunk movement.
3) L_2-S_5 patients have partial paralysis in the lower extremities and groin with varying degrees of weakness in the hips, knees, ankles and feet.

2.3.2.2 Incomplete Injury

In an incomplete spinal cord injury there is still some function below the level of injury. The level of paralysis is dependent upon whether the front, back, side, or center of the spinal cord was damaged.

1) Central cord syndrome, the most common form of incomplete spinal cord injury, is associated with trauma to the central portion of the spine. It affects movement in the arms and hands more than the legs. In some cases patients suffer from bladder dysfunction and sensory loss below the level of injury.
2) Anterior cord syndrome results from injury to the front section of the spine. Of the incomplete spinal cord injuries, anterior cord syndrome usually has the worst outcomes. Most patients lose movement as well as the ability to feel pain and temperature below the level of injury but retain some touch, vibration and position sense.
3) Posterior cord syndrome is the least common of incomplete spinal cord injuries. Patients retain some motor function, pain, temperature, and touch but not position sense. Motor strength, as well as pain and temperature sensation, is relatively spared. Patients may require walking devices but otherwise function fairly well.
4) Brown-Sequard syndrome occurs when there is injury to one side of the cord that causes weakness or paralysis on the injured side and loss of pain and temperature sensation on the opposite side. This syndrome can be caused by penetrating trauma (e.g., a puncture wound to the neck or back) or certain diseases such as multiple sclerosis.
5) Conus medullaris syndrome, which is caused by an injury to the sacral region of the spine, may result in bladder problems, groin numbness, and weakness in the lower extremities.
6) Cauda equina syndrome occurs when pressure on the nerves at the bottom of the spinal cord (from herniated disk, bleeding or spinal tumor) causes pain, numbness, weakness and bladder problems.

3

Chapter Three

DC Motors Background

Chapter 3

DC Motors Background

3.1 Introduction

At the most basic level, electric motors exist to convert electrical energy into mechanical energy. This is done by way of two interacting magnetic fields ; one stationary, and another attached to a part that can move. A number of types of electric motors exist. DC motors have the potential for very high torque capabilities (although this is generally a function of the physical size of the motor), are easy to miniaturize, and can be "throttled" via adjusting their supply voltage. DC motors are also not only the simplest, but the oldest electric motors.

The basic principles of electromagnetic induction were discovered in the early 1800's by Oersted, Gauss, and Faraday. By 1820, Hans Christian Oersted and Andre Marie Ampere had discovered that an electric current produces a magnetic field. The next 15 years saw a flurry of cross-Atlantic experimentation and innovation, leading finally to a simple dc rotary motor. A number of men were involved in the work, so proper credit for the first dc motor is really a function of just how broadly you choose to define the word "motor."

DC motors are, driven from a dc power supply . Unless otherwise specified , the input voltage to a dc motor is assumed to be constant , because that assumption simplifies the analysis of motors and the comparisons between different types of motors.

3.2 The equivalent circuit of a DC motor

The armature circuit is represented by an ideal voltage source E_A and a resistor R_A. This representation is really the Thevenin equivalent of the entire rotor structure ,including rotor coils, interpoles, and compensating windings, if present. The brush voltage drop is represented by a small battery V_{brush} opposing the direction of current flow in the machine. The field coils, which produce the magnetic flux in the generator, are represented by inductor L_F and resistor R_F. The separate resistor R_{adj} represents an external variable resistor used to control the amount of current in the field circuit.

There are a few variations and simplifications of this basic equivalent circuit. The brush drop voltage if often only a very tiny fraction of the generated voltage in a machine. Therefore, in cases where it is not too critical, the brush drop voltage may be left out or approximately included in the value of R_A. Also, the internal resistance of the field coils is sometimes lumped together with the variable resistor, and the total is called R_F. A third variation is that some generators have more than one field coil, all of which will appear on the equivalent circuit.

The internal generated voltage in this machine is given by the equation:

$$E_A = K\text{ø}\omega \quad \ldots \quad \text{Equation (3.1)}$$

Where :

E_A : Armature voltage

k : Constant

Ø : Flux

ω : Speed of rotation

And the induced torque developed by the machine is given by :

$$\tau_{\text{ind}} = K\text{Ø}I_A \quad \ldots \quad \text{Equation (3.2)}$$

Where :

τ_{ind} : Induced torque.

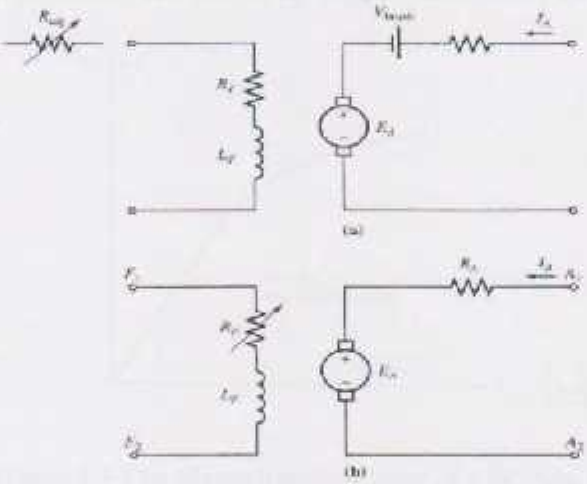

Figure 3.1 The Equivalent Circuit of a DC Motor [11].

3.3 The Magnetization Curve of a DC Machine

E_A is directly proportional to flux and the speed of rotation of the machine. E_A is therefore related to the field current . field current in a dc machine produces a field magneto motive force given by $\mathcal{F} = N_F I_F$. magneto motive force produces a flux in the machine in accordance with its magnetization curve .

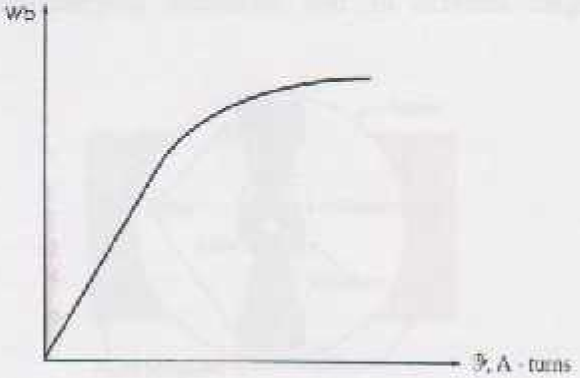

Figure 3.2 The Magnetization Curve of a Ferromagnetic Material [11].

Since If is proportional to magneto motive force and since E_A is proportional to flux, magnetization curve can represented as a plot of E_A versus field current for a given speed ω_0.

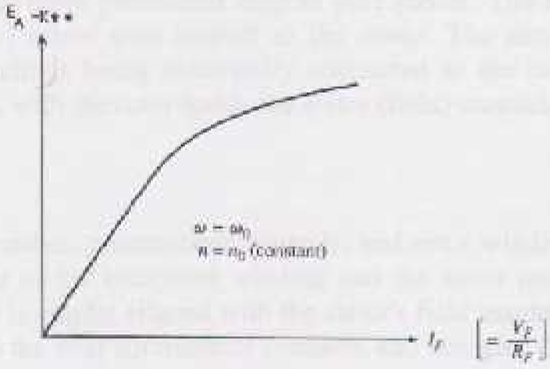

Figure 3.3 The Magnetization Curve of a DC Machine [11].

3.4 DC Motors Principles of operation

In any electric motor, operation is based on simple electromagnetism. A current-carrying conductor generates a magnetic field ; when this is then placed in an external magnetic field, it will experience a force proportional to the current in the conductor, and to the strength of the external magnetic field. opposite (North and South) polarities attract, while like polarities (North and North, South and South) repel. The internal configuration of a dc motor is designed to harness the magnetic interaction between a current-carrying conductor and an external magnetic field to generate rotational motion.

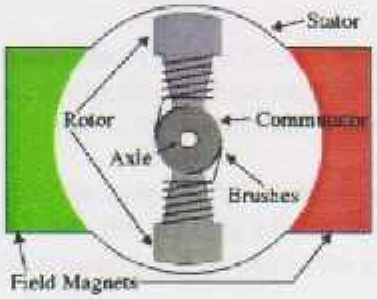

Figure 3.4 A Common DC Motor Parts [12]

Every dc motor has six basic parts , axle, rotor (a.k.a., armature), stator, commutator, field magnet(s), and brushes. In most common dc motors, the external magnetic field is produced by high-strength permanent magnets . The stator is the stationary part of the motor , this includes the motor casing, as well as two or more permanent magnet pole pieces. The rotor (together with the axle and attached commutator) rotate with respect to the stator. The rotor consists of windings (generally on a core), the windings being electrically connected to the commutator. Figure 3.4 shows a common motor layout, with the rotor inside the stator (field) magnets.

The geometry of the brushes, commutator contacts, and rotor windings are such that when power is applied, the polarities of the energized winding and the stator magnet(s) are misaligned, and the rotor will rotate until it is almost aligned with the stator's field magnets. As the rotor reaches alignment, the brushes move to the next commutator contacts, and energize the next winding.

In real life, though, dc motors will always have more than two poles (three is a very common number). In particular, this avoids "dead spots" in the commutator.

3.5 Types of DC motors

There are five types of dc motors Separately excited and shunt dc motors , motor , compounded dc motor, series dc motor and permanent – magnet dc.

3.5.1 Permanent magnet DC motor

This subsection will introduce the permanent magnet motor with some details.

3.5.1.1 PM Brushed Motors

A simple brushed motor can be seen in Figure 3.5. The electricity from the battery enters the motor through two leads and charges the brushes. These brushes make contact with the commutator ring. The current then runs through the wire coiled around the armature, this electric coil creates a magnetic field around the armature.

The armature then rotates to align with the field magnet's magnetic field. At a certain point in the rotation the commutator switches the polarity of the armature. This switch continues the rotation and the cycle continues. The armature is attached to the axle of the motor which is the same axle that protrudes from the motor.

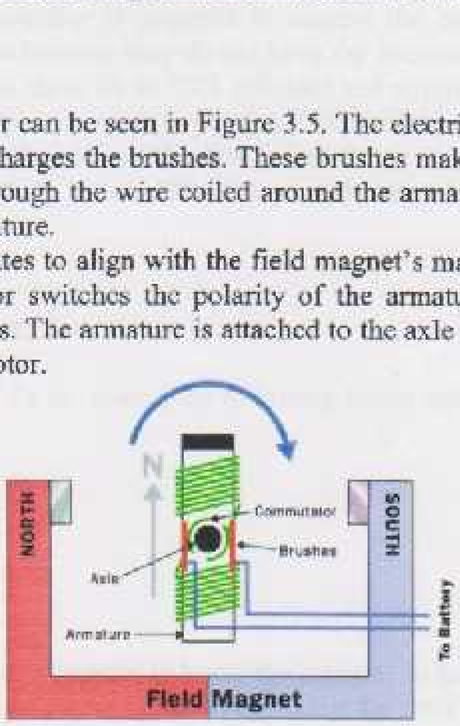

Figure3.5 Simple Electric Motor [13]

Advantages of brushed motors are that they are relatively low cost compared to other types of electric motors. Brushed motors also make it very easy to control the speed and have a linear torque to speed curve. Disadvantages of the brushed motor are that the brushes are constantly scratching the commutator, creating friction and wear. This increases the maintenance of the motor and reduces the efficiency to levels of 75 to 80 %.

Electric wheelchair motors are most commonly DC brushed motors and run off of a 24V battery. They are available for purchase, however they are specialty motors and are very expensive. This is due to the unique requirements demanded by an electric wheelchair. Electric wheelchair motors must provide sufficient power, minimum maintenance, and long life. The motor is attached to a gear box that transmits the power of the motor to the wheel. If possible, a wheelchair motor and gearbox would be a desirable component of a- new design; however, due to cost an electric wheelchair motor would need to be donated to the group if used.

3.5.1.2 PM Brushless Motors

A brushless motor operates on the same principles of electromagnetism that the brushed motor does. However the internal design of the motor is different. In a brushless motor the electromagnetic coils are stationary and the field magnet is replaced by many permanent magnets attached to the rotor. The coils are positioned and get charged in sequence such that the permanent magnets are forced to rotate.

A brushless motor controller is required to control the charging of the coils. Brushless motors are highly advantageous because they do not have the friction or wear created by the brushes in a brushed motor. This makes them 85 to 90% efficient and requires much less maintenance than brushed motors. Brushless motors are more expensive than brushed motors but can be cost effective over the long run due to their efficiencies. The first generation prototype will be made based on cost effectiveness, but longer lasting, more efficient motors would be recommended for future generations.

3.6 DC motor efficiency calculations

To estimate the efficiency of a dc motor, the following losses must be determined:

1) Copper losses.
2) Brush drop losses.
3) Mechanical losses.
4) Core losses.
5) Stray losses.

To find the copper losses, we need to know the currents in the motor and two resistances. In practice, the armature resistance can be found by blocking the rotor and a small DC voltage to the armature terminals , such that the armature current will equal to its rated value. The ratio of the applied voltage to the armature current is approximately R_A.

The field resistance is determined by supplying the full-rated field voltage to the field circuit and measuring the resulting field current. The field voltage to field current ratio equals to the field resistance.

Brush drop losses are frequently lumped together with copper losses. If treated separately, brush drop losses are a product of the brush voltage drop V_{BD} and the armature current I_A.

The core and mechanical losses are usually determined together. If a motor is running freely at no load and at the rated speed, the current I_A is very small and the armature copper losses are negligible. Therefore, if the field copper losses are subtracted from the input power of the motor, the remainder will be the mechanical and core losses. These two losses are also called the no-load rotational losses. As long as the motor's speed remains approximately the same, the no-load rotational losses are a good estimate of mechanical and core losses in the machine under load.

4

Chapter Four
Motorized Wheelchair

4.1 Introduction .

4.2 Main Wheelchair components

- **4.2.1 Input Device.**
- **4.2.2 Power Controller.**
- **4.2.3 Motors.**
- **4.2.4 Battery.**

Chapter Four

Motorized Wheelchair

4.1 Introduction

Motorized wheelchair shown in Figure 4.1 consists of mechanical system (motors) required to provide the chair movement at the necessary speed, electrical system represented by the controlling system and the battery required to provide chair motor with the required voltage.

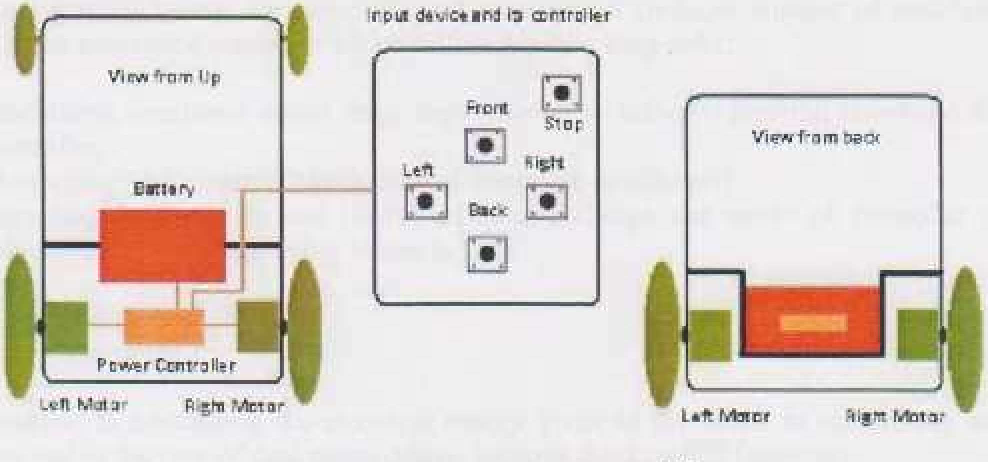

Figure 4.1 Wheelchair Model [16]

The wheelchairs available today works as when the front switch is pressed, the two motors moves synchronously in the same direction (clockwise), when the back switch is pressed the two motors moves synchronously in the same direction (counterclockwise), and when the right switch is pressed the two motors moves synchronously at the opposite direction, finely the left movement act as the right movement except that the motors moves at opposite direction.

4.2 Main Wheelchair Components

The main wheelchair components are shown in Figure 4.2, each stage is discussed in the following sections.

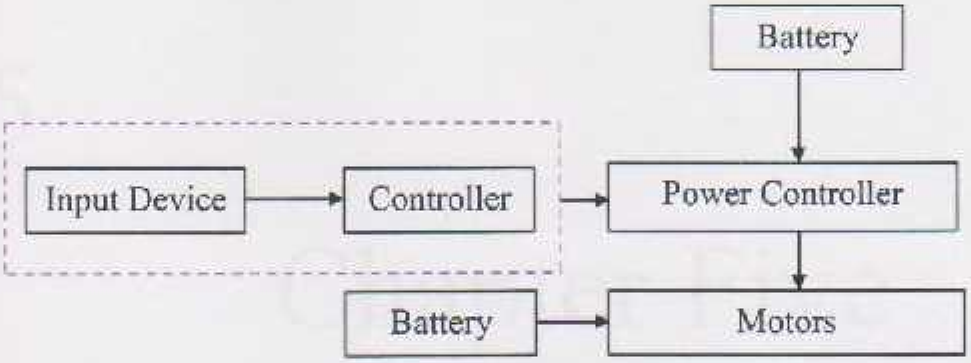

Figure 4.2 Wheelchair Block Diagram

4.2.1 Input Devices

There are several types of wheelchair input devices such as Proportional (joystick), non-proportional (switch inputs, sip and puff) and scan-control (reduces number of switches). These followed by its associated controller which fulfills the following tasks:

1) Translating command signal from input device to velocity/direction command for power controller.
2) Monitoring performance (Many internal electronic parameters).
3) Providing feedback to user (status of battery charge and mode of controller operation (on/off) commonly displaying to user)s.

4.2.2 Power Controller

Its function is controlling the electrical energy given to the motor to control the wheelchair movement, and in the case of dual motor drives, controls the direction (steering).

4.2.3 Motors

Motors are the heart of the wheelchair, without motors the chair is not able to move. The DC motors converts the electrical energy provided from the battery to mechanical energy.

The Common types of motors:

1. Permanent magnet (PM) direct current (DC) with brushes.
2. Permanent magnet (PM) brushless DC.

4.2.4 Battery

Battery is the Source of electrical energy (direct current). Electric wheelchairs use - deep cycle, sealed, lead-acid, and rechargeable- batteries. They are available in different sizes and power or ampere-hour ratings. They are typically 24V batteries that are available in 30 to 90 ampere-hour capacities, and they are very heavy.

5

Chapter Five
System Design and Implementation

Chapter Five

System Design and Implementation

5.1 Introduction

This chapter explains in details the voice controlled wheelchair's design, and final schematic diagram for the system.

5.2 System Block Diagram

As discussed in the preceding chapters, the idea of the project is to replace the input device available in the tradition electrical wheelchair with voice commands. The voice commands are processed by the communication engineering team, providing us with five analog pulses with different frequencies. These signals are applied to the PIC microcontroller and processed in a way that gives a '0' volt or '5' volt output to the H-Bridge.

The following sections describe the main stages of the project deeply.

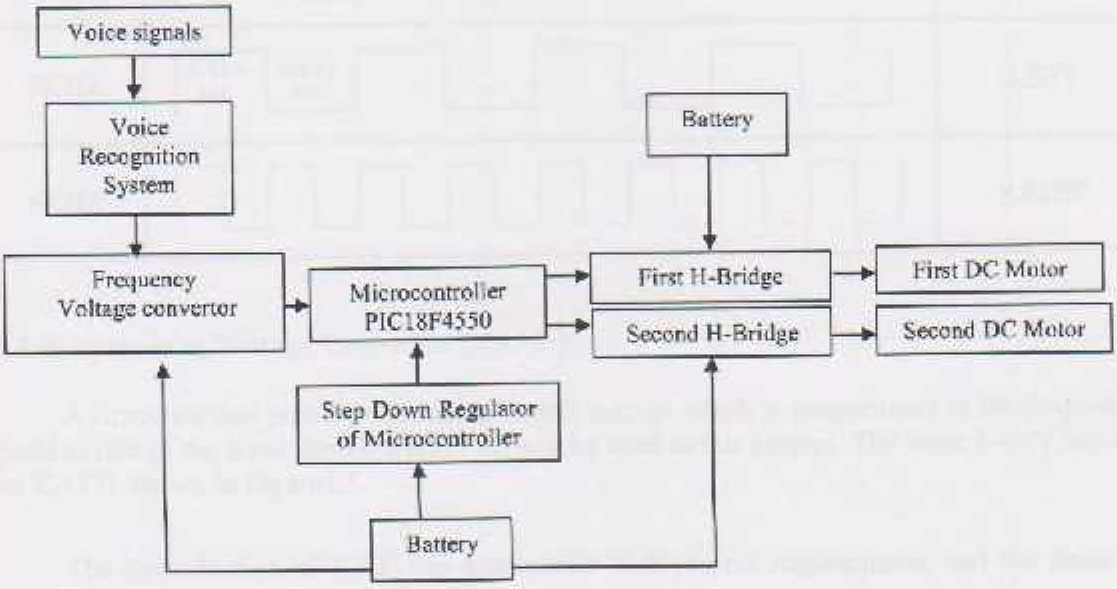

Figure5.1 System Block Diagram

5.2.1 Input Signal Classification

As mentioned in the preceding sections, five different signals are required to control chair movements (right, left, backward, forward, and stop). All These signals are square pulses with different frequency and with same duty cycles.

When one of these signals entering the PIC input, the PIC will give an output signal that controls the switches of the Two H- Bridges which control the two motors as shown in table 5.1.

Table 5.1 Signal Classification

Signal Frequency	Signal Shape	Signal Name
1KHZ		STOP
2KHZ	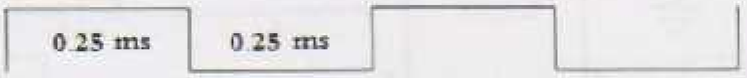	FORWARD
4KHZ	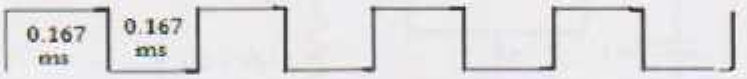	BACKWARD
5KHZ		LEFT
6KHZ		RIGHT

5.2.2 Frequency to Voltage Convertor (KA331)

A converter that provides an analog output voltage which is proportional to the frequency or repetition rate of the input signal. KA331 IC will be used in this project. The basic F-to-V converter uses KA331 shown in Figure5.5.

The classification of KA331 is appropriate with project requirements, and the features of KA331 are:

1. Operates on single 12V supply.
2. Pulse output compatible with all logic forms.

3. Low power consumption: 500 mill watt typical at 12V.
4. Wide dynamic range, 100 dB min at 10 kHz full scale frequency.
5. Wide range of full scale frequency: 1 Hz to 100 kHz
6. Low cost.

The need of using this IC is making an analog signal (voltage) from a pulse train (sound) before entering to the microcontroller to make a digital output. KA331 has many circuits for convert frequency-to-voltage; one of them is the basic convertor as shown in Figure 5.3.

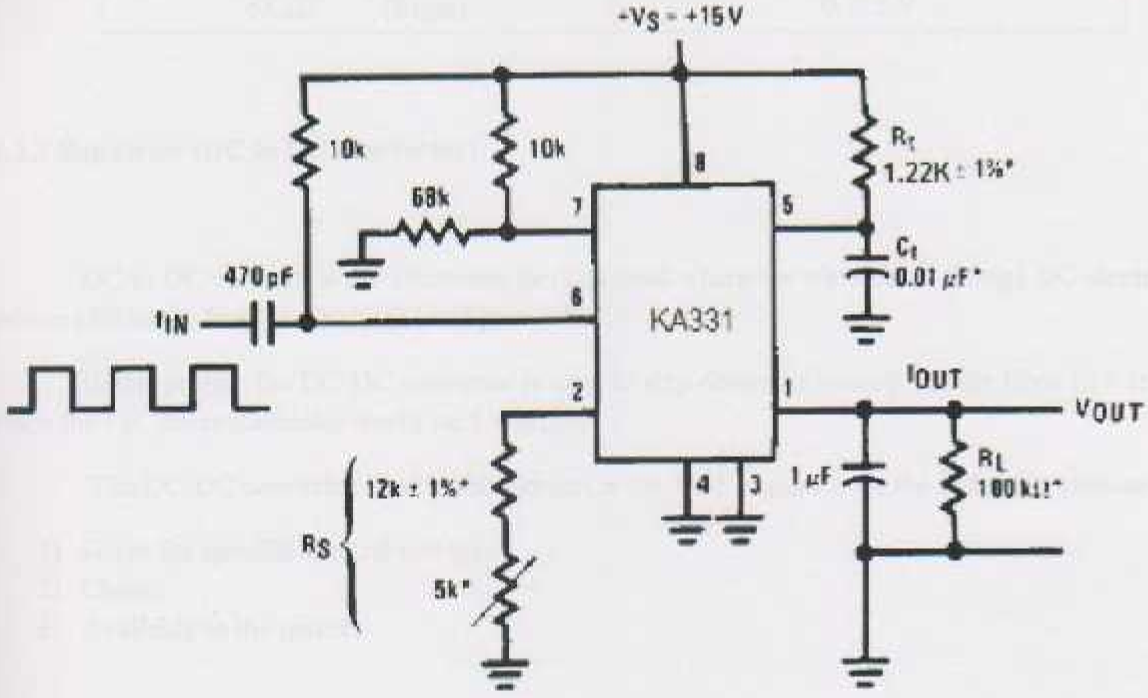

Figure 5.2 KA331 Circuit Diagram

The output voltage of KA331 is:

$$Vout = \text{fin} * 2.09 * \frac{Rl}{Rs} * (RtCt) \quad \ldots \quad \text{Equation (5.1)}$$ [18]

Table 5.2 KA331 Calculated Voltage Outputs Due to Frequency Inputs

Input (Frequencies)	V_{OUT}
1KHZ (Stop)	0.150 V
2KHZ (Forward)	0.274 V
4KHZ (Backward)	0.491 V
5KHZ (Left)	0.593 V
6KHZ (Right)	0.752 V

5.2.3 Regulator (DC to DC Convertor)

DC to DC convertors are electronic devices used whenever we want to change DC electrical power efficiently from one voltage level to another.

In this project the DC-DC convertor is used to step down the battery voltage from 12 v to 5 v since the PIC microcontroller works on 5 v supply.

The DC-DC convertor used in this project is the 7805 regulator for the following reasons:

1) Gives the specific wanted voltage.
2) Cheap.
3) Available in the market.

5.2.4 The PIC18F4550 Controller

A Microcontroller (also microcomputer, MCU or µC) is a small computer on a single integrated circuit consisting internally of a relatively simple CPU, clock, timer, I/O ports, and memory. Microcontrollers are designed for small or dedicated applications. Thus, in contrast to the microprocessors used in personal computers and other high- performance or general purpose applications, simplicity is emphasized.

Some microcontrollers may use four-bit words and operate at clock rate frequencies as low as 4 KHz, as this is adequate for many typical applications, enabling low power consumption (mill watts).

Choosing this type of microprocessor for the following reasons:

1) 32768 –bytes–program memory. This represents enough memory to perform the project.
2) 13 input channels, 10 bit analog – to – digital module that convert analog signal to digital.
3) Availability of PIC programming in the University.
4) Cheap.

A 20MHz crystal is connected to the OSC1 & OSC2 pins to establish oscillation as shown in figure 5.4. Capacitor values required to produce acceptable oscillator, but also increases the start-up time. The PIC18F4550 device includes an internal oscillator which generates two different clock signals; either can be used as the microcontroller's clock source.

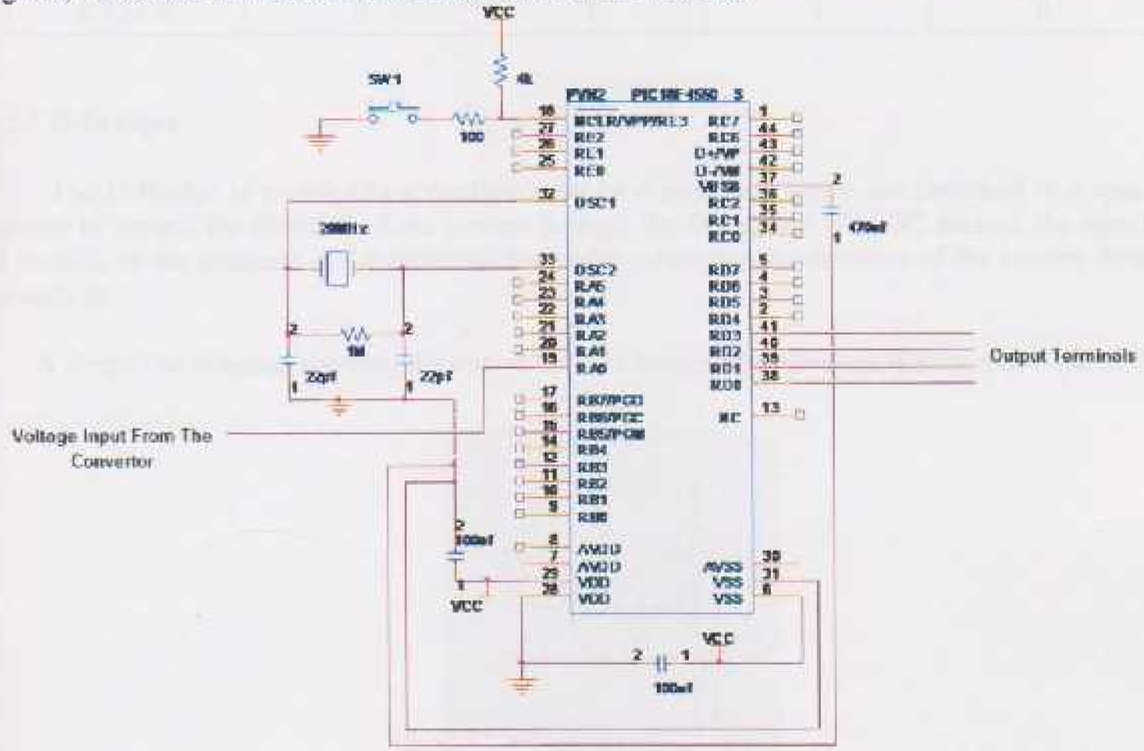

Figure 5.3 PIC18F4550 with Oscillator and Reset

The microcontroller input voltage for all directions and the PIC outputs in every direction shown in Table 5.2.

Table 5.3 PIC18F4550 Input Voltage and Output Terminals

Input Voltage (RA0)	**Output Terminals**			
	RD0	**RD1**	**RD1**	**RD3**
0.150 V	0	0	0	0
0.274 V	1	0	1	0
0.491 V	0	1	0	1
0.593 V	1	0	0	1
0.752 V	0	1	1	0

5.2.5 H-Bridges

The H-Bridge is principally a configuration of 4 switches, which are switched in a specific manner to control the direction of the current through the DC motor. (For DC motors, the direction of rotation of the armature of the motor is changed by changing the direction of the current flowing through it).

A simplified diagram showing the operation of H-bridge configuration is shown in Figure 5.6.

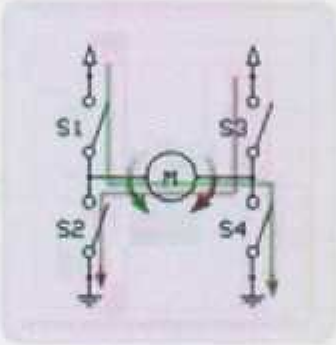

Figure 5.4 H-Bridge Principle of Operation[17]

There are two possible paths for the current:

1) The red path, where the current is directed to the motor through the switches S3 and S2, causing the motor to turn clockwise.

2) The green path, where the current is directed to the motor through the switches S1 and S4, causing the motor to turn anti-clockwise.

In this project the four switches are replaced with four transistors as, in order to electronically control the flow of current in the motor, hence, allowing us to control the direction of the motor from the PIC microcontroller, as shown in Figure 5.7.

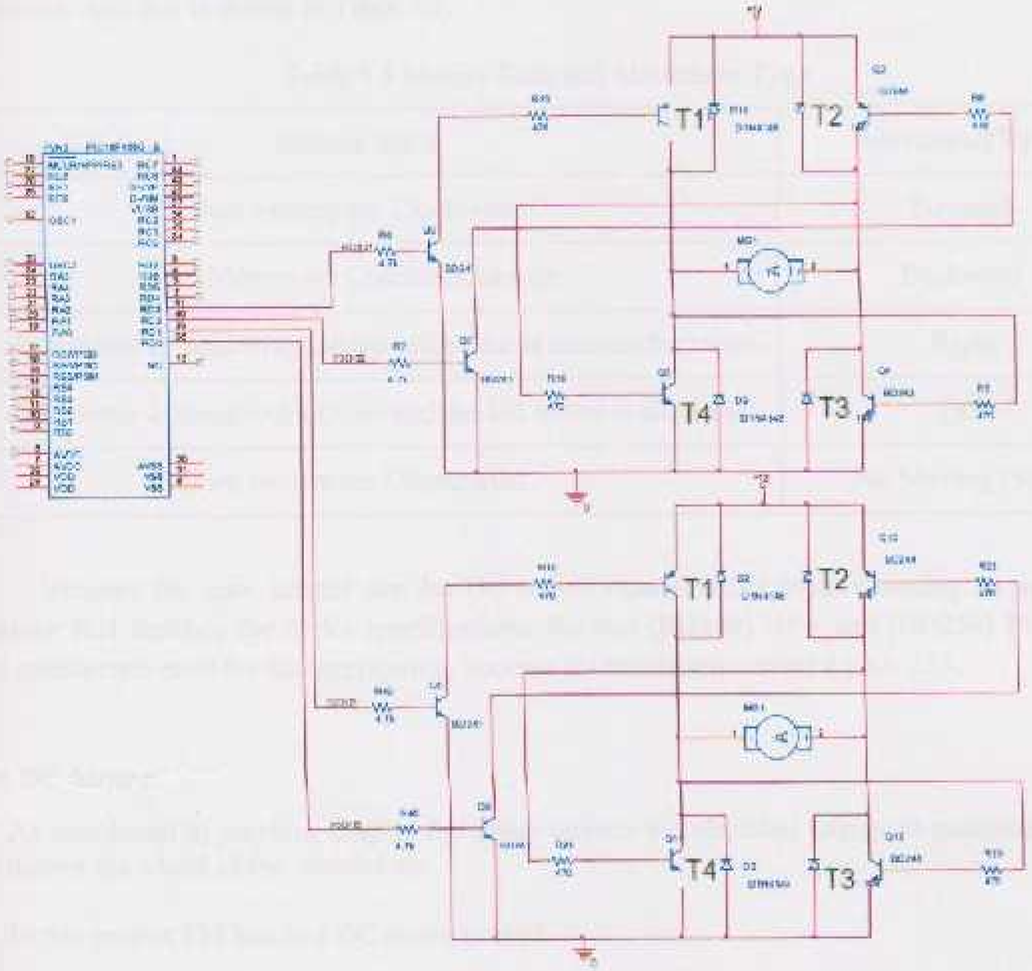

Figure 5.5 PIC18F4550 with H-Bridge

According to the transistors state, the motor direction will be determined as shown in table 5.2.

Table 5.4 States of Transistors and Motor Behavior

T1	T2	T3	T4	**Motor Direction**
OFF	ON	OFF	ON	Clockwise
ON	OFF	ON	OFF	Counterclockwise
OFF	OFF	OFF	OFF	Stop

When both motors are clockwise the wheelchair moves forward, and when the motors are counterclockwise the wheelchair moves backward. The case is different for right and left directions, as for left direction, the right motor moves clockwise and the left motor moves counterclockwise, and for the right direction, the right motor moves counterclockwise and the left one moves clockwise. And this is shown in Table 5.3.

Table 5.5 Motors State and Movement Type

Motors State	**Movement Type**
Two Motors are Clockwise.	Forward
Two Motors are Counterclockwise.	Backward
The right motor is clockwise and the left motor is counterclockwise.	Right
The right motor is counterclockwise and the left motor is clockwise.	Left
Two motors are Deactivated.	No Moving (Stop)

Because the max current for the DC motor equals 9A, it must choosing an appropriate transistor that matches the motor specifications, for that (BD249) NPN and (BD250) PNP are the most appropriate ones for this application, because it's maximum current equals 25A.

5.2.6 DC Motor.

As mentioned in previous chapter the motor coverts the electrical energy to mechanical energy that moves the wheel of the wheelchair.

In this project PM brushed DC motor is used.

5.2.7 Battery.

The battery is the power source that provides all of the system component energy, the voltage of the project battery is 12 volt battery.

5.3 Final System Schematic.

Final system schematic contains all parameters drawn by ORCAD program and shows all values already will be used. And this is shown in figure 5.8.

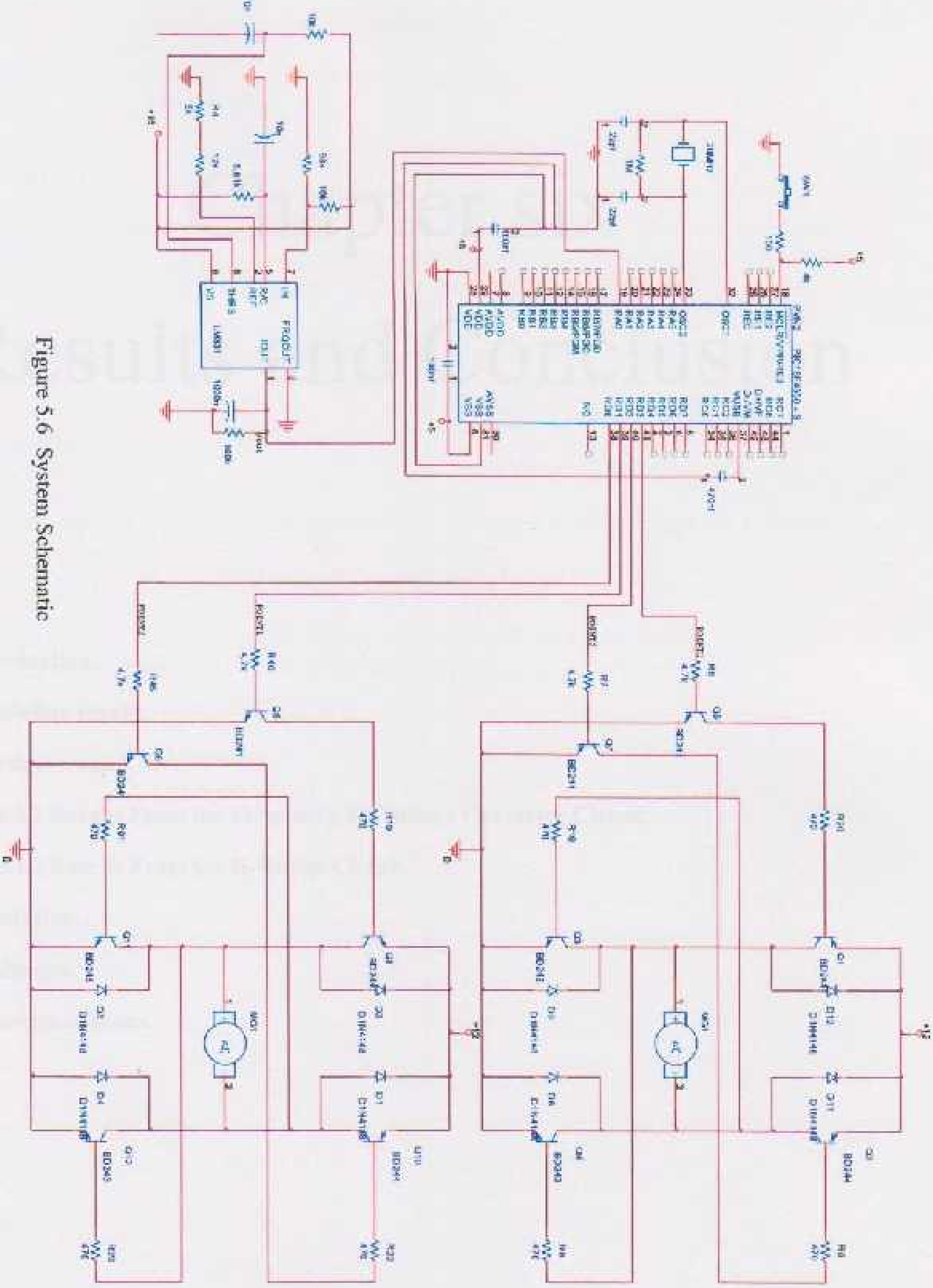

Figure 5.6 System Schematic

6

Chapter six

Results and Conclusion

Chapter Six

Results and Conclusion

6.1 Introduction.

In the preceding chapters, the complete construction and principle of operation for each part in the wheelchair were briefly discussed, this will help to achieve the main goal of this project that is to design a voice controlled wheelchair.

This chapter talks about the simulation results, practical results, conclusion and future work.

6.2 Simulation results.

This sections shows the simulation results for the motor in both directions (Forward and Backward) states, and the Stop state.

In the Forward state, the transistors T2 ,T4 are on, and T1,T3 are off, in the two H-Bridges ,in this case the motor will move clockwise as shown in Figure 6.1.

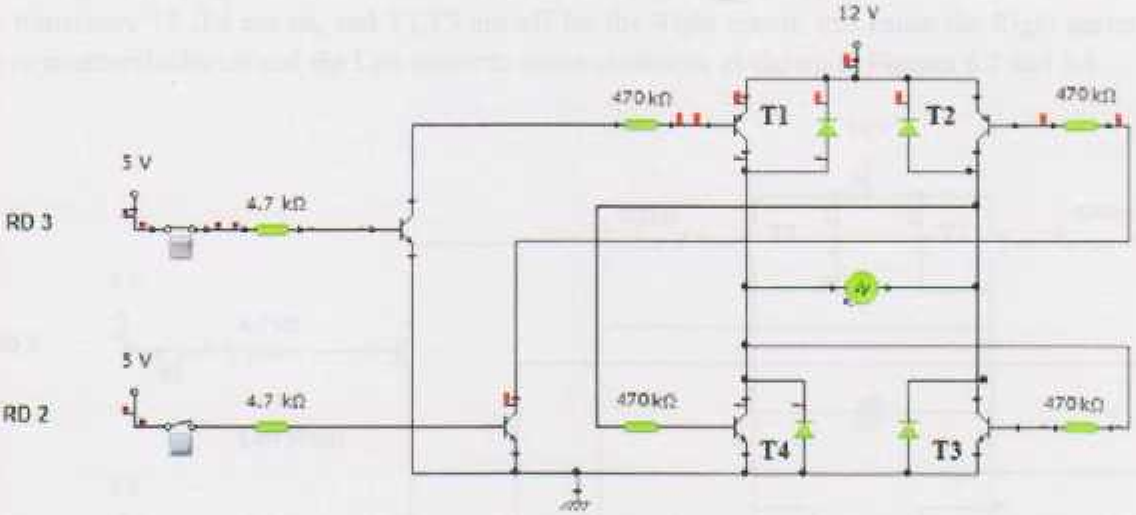

Figure 6.1 Forward State Simulation

In the Backward state, the transistors T1 ,T3 are on, and T2,T4 are off, in the two H-Bridges ,in this case the motor will move counterclockwise as shown in Figure 6.2.

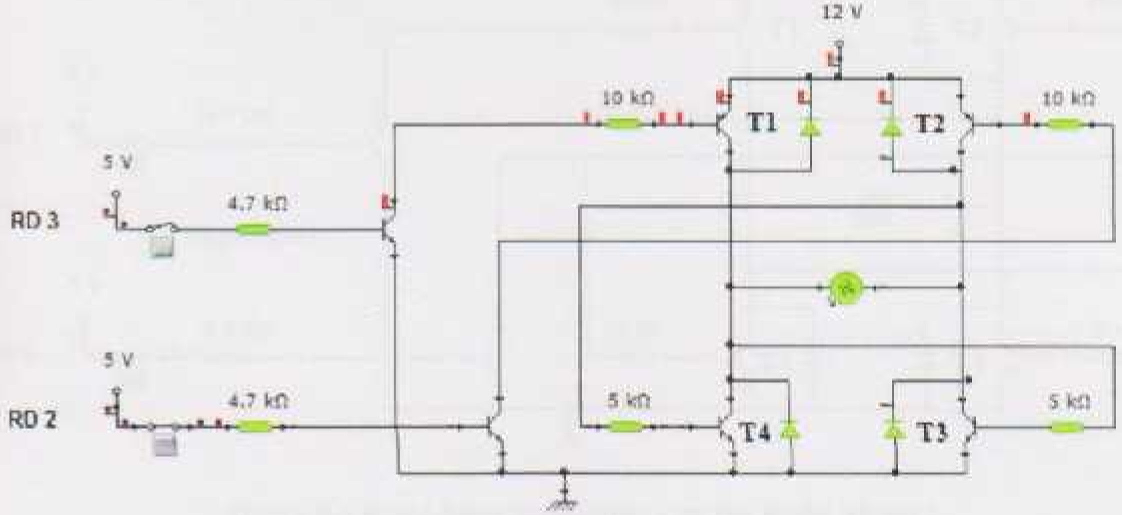

Figure 6.2 Backward State Simulation

As for the Right state, the transistors T1 ,T3 are on, and T2,T4 are off for the left motor, and the transistors T2 ,T4 are on, and T1,T3 are off for the Right motor, this cause the Right motor to move counterclockwise and the Left motor to move clockwise as shown in Figures 6.3 and 6.4.

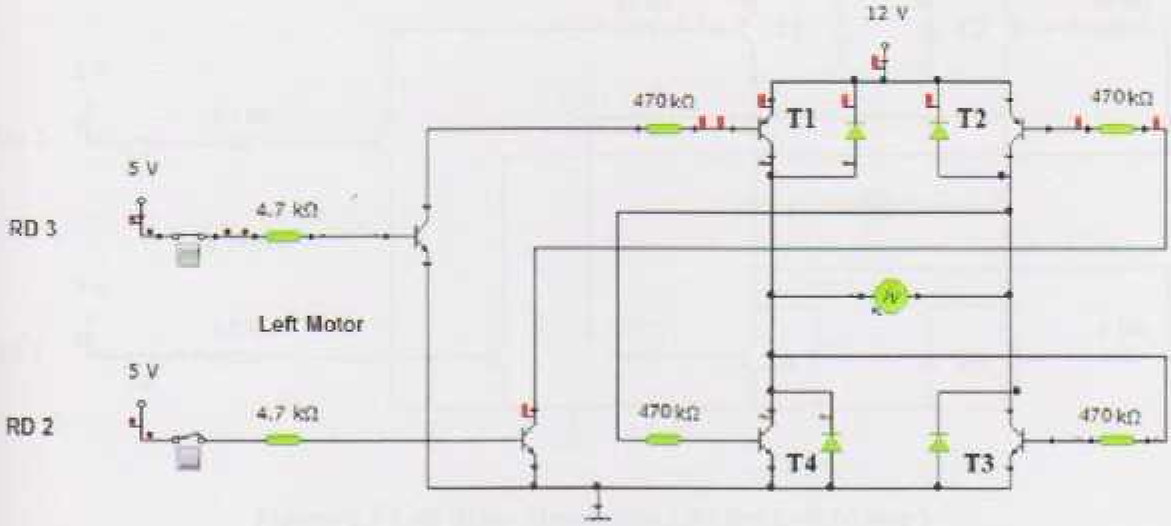

Figure 6.3 Right State Simulation (At the Left Motor)

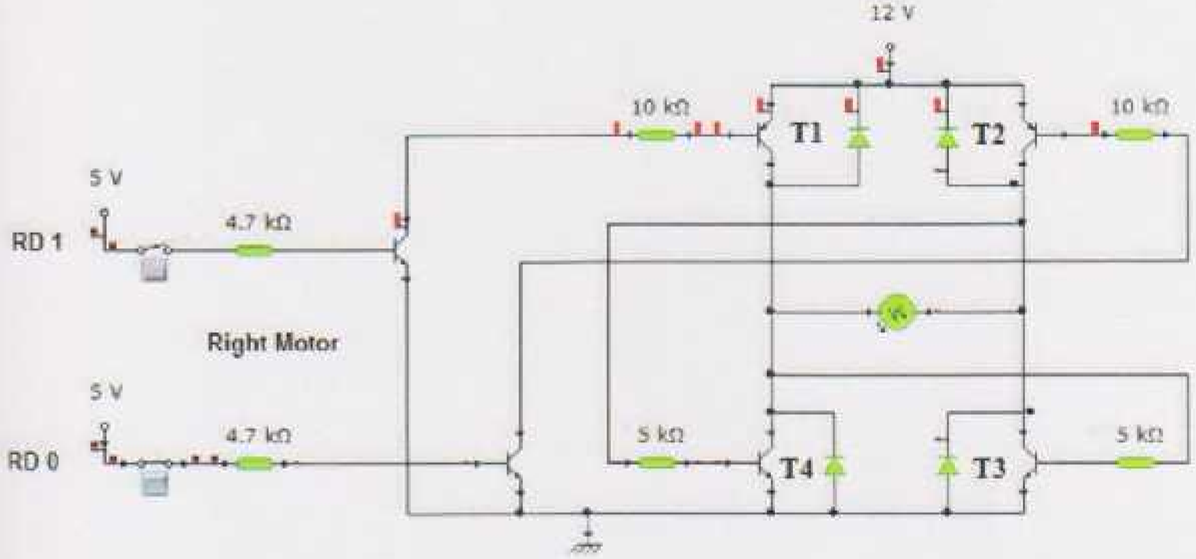

Figure 6.4 Right State Simulation (At the Right Motor)

Finally, for the Left state, the transistors T2 ,T4 are on, and T1,T3 are off for the Right motor, and the transistors T1 ,T3 are on, and T2,T4 are off for the Left motor, this cause the Right motor to move clockwise and the Left motor to move counterclockwise as shown in Figures 6.5 and 6.6

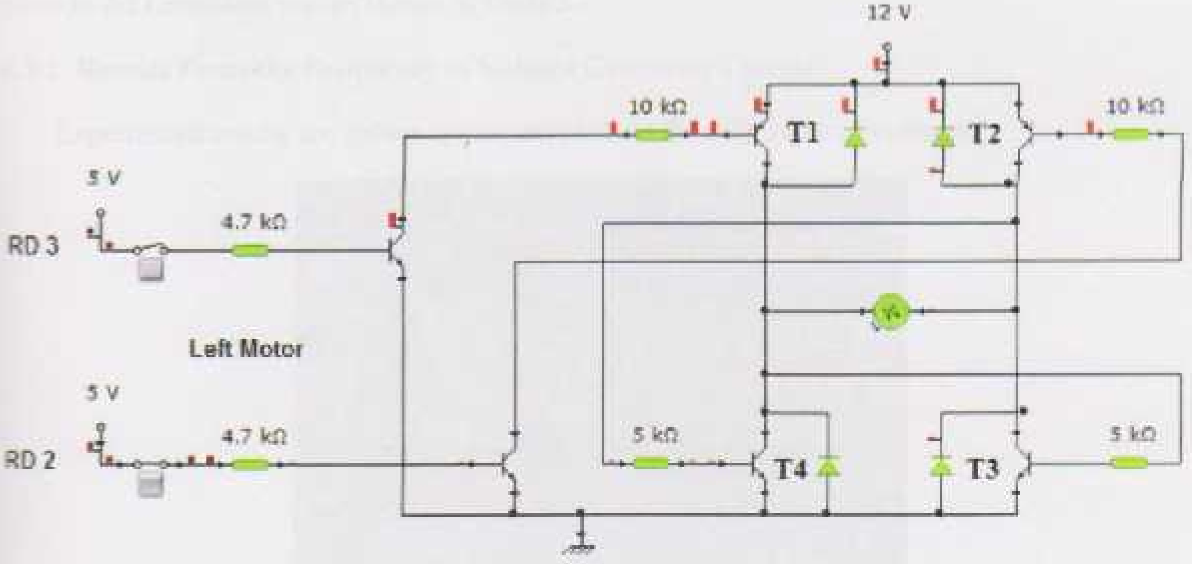

Figure 6.5 Left State Simulation (At the Left Motor)

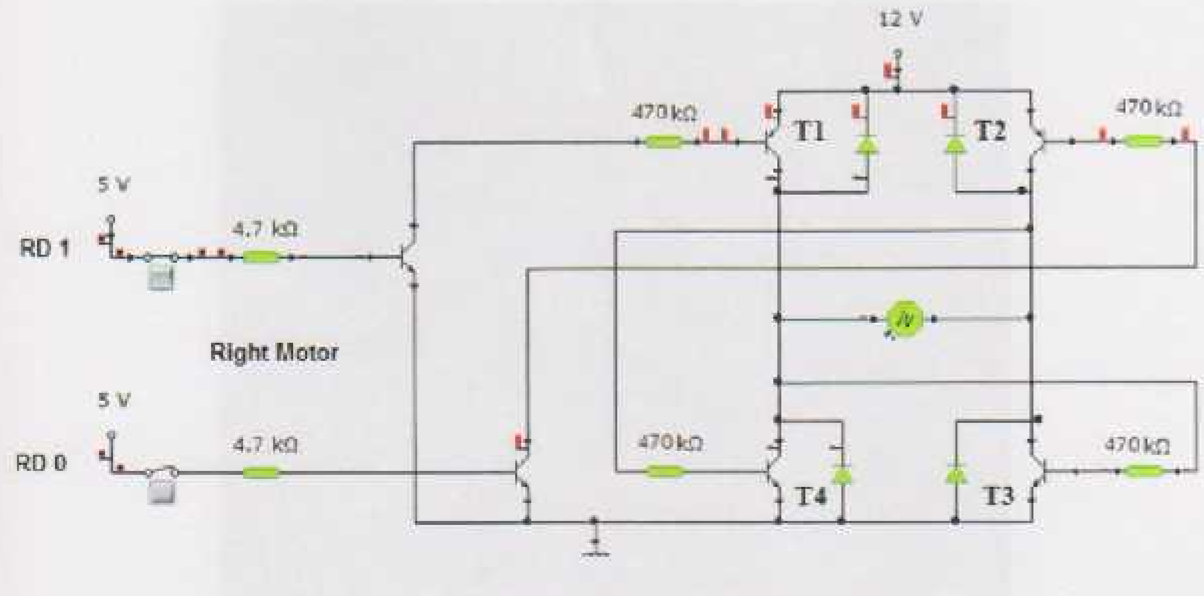

Figure 6.6 Left State Simulation (At the Right Motor)

6.3 Practical results.

This section shows the results from the Frequency to Voltage Convertor, and this results are close to the Calculated results shown in Table 5.2.

6.3.1 Results From the Frequency to Voltage Convertor Circuit

Experiments results are shown in the next pictures for each value of voltages.

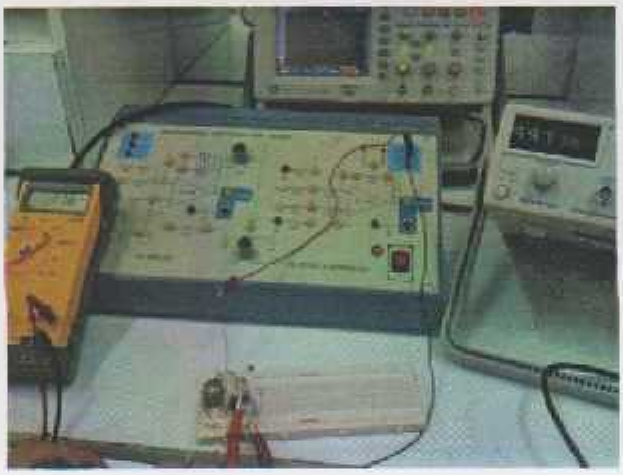

Figure 6.7 Output Voltage at 1KH

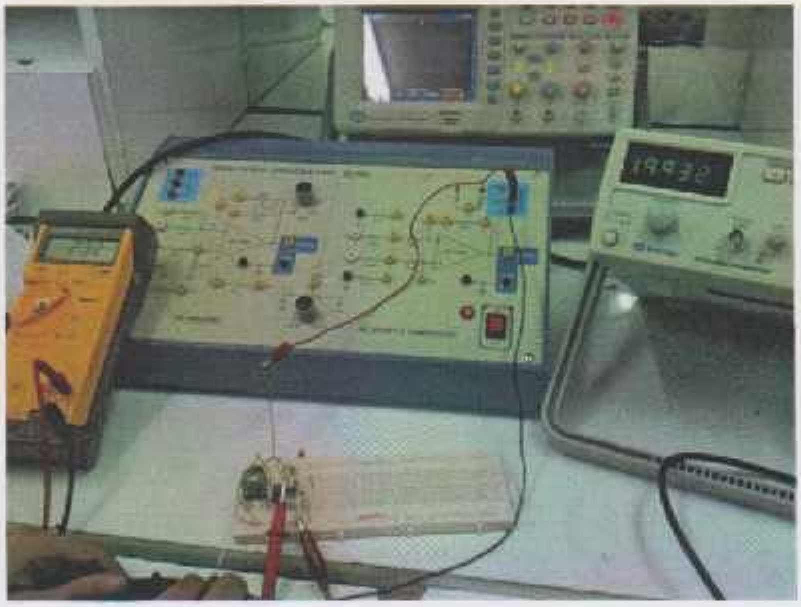

Figure 6.8 Output Voltage at 2KH

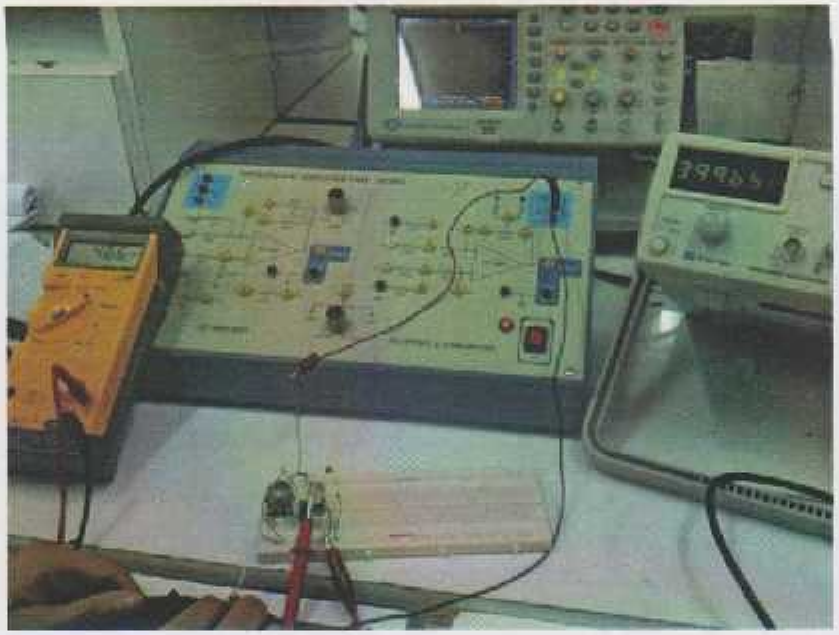

Figure 6.9 Output Voltage at 4KH

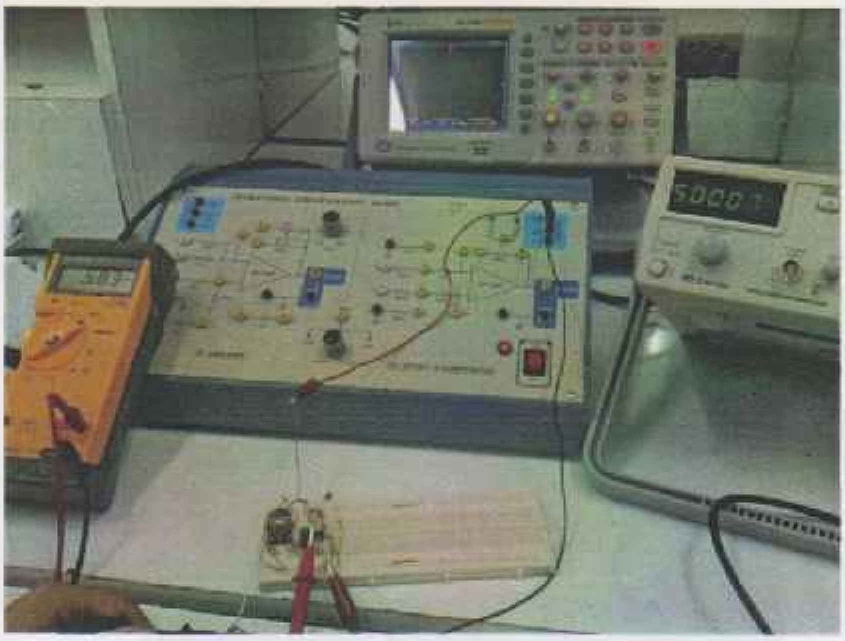

Figure 6.10 Output Voltage at 5KH

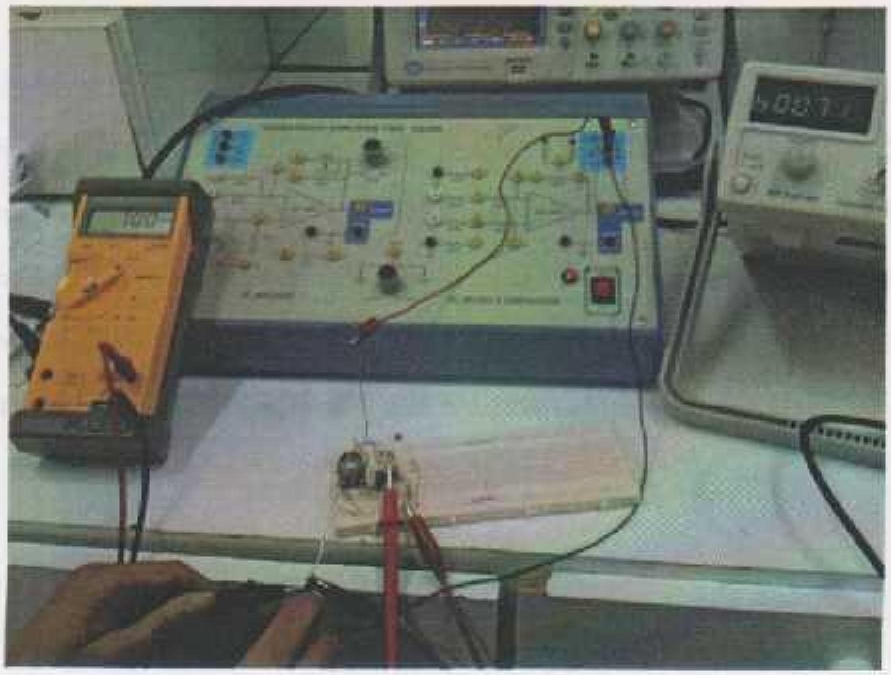

Figure 6.11 Output Voltage at 6KH.

6.3.2 Results From the H-Bridge Circuit

After implementing the H-Bridge circuit and testing it, the wanted results occurred, and though it worked and derived the motors, figure 6.6 shows the H-bridge circuit.

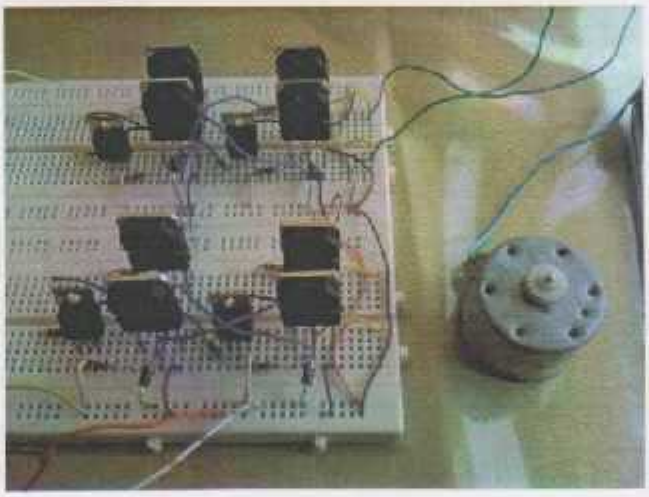

Figure 6.12 H-Bridge with Motor

6.4 Conclusions.

After building the system and testing it, the following results have occurred:

1) The chair moves forward when applying a pulse waveform of frequency 2 KHz.
2) The chair moves backward when applying a pulse waveform of frequency 4 KHz.
3) The chair moves to the left when applying a pulse waveform of frequency 5 KHZ.
4) The chair moves to the right when applying a pulse waveform of frequency 6 KHZ.
5) The chair stops when applying a pulse waveform of frequency 1 KHz.

6.5 Challenges

While designing the system, there are many challenges were faced such as:

1) The difficulty of providing a wheelchair with specific features.
2) The high cost of the wheelchair.
3) Some of the parts for the project were not available in the market.
4) The difficulty of programming the PIC, since there is not enough background of programming the PIC.

6.6 Recommendations

After completing the design, and fulfilling the objectives of the project. The following points can be implemented in the future to give further development to the system:

1) Providing the wheelchair with a GPS system.
2) Increasing the number of vocabulary that the system deal with.
3) Adding a speed control with different speeds to the chair.
4) Adding accessories to the wheelchair, like a hand that helps the patient to open the door or turn light switches on or off.

References

[1] http://www.yourlegalguide.com/spinal-cord-paralysis

[2] Topographic and Functional Anatomy of the Spinal Cord , Author: Francisco de Assis Aquino Gondim, MD, MSc, PhD; Chief Editor: Thomas R Gest, PhD .

[3] Overview of Spinal Cord Injury Anatomy & Physiology by Amie B. Jackson, MD

[4] http://www.imaios.com/.../Spine/Spinal-cord-diagrams

[5] http://electronics.howstuffworks.com

[6] http://micro.magnet.fsu.edu/electromag/electricity/generators/index.html

[7] http://www.prestoliteasia.com

[8] http://www.arrickrobotics.com/motors.html

[9] http://www.makingthings.com/teleo/products/documentation/app_notes/motors_general.htm

[10] http://ee.lamar.edu/gleb/Index.htm

[11] Stepher J. Chapman, Electric Machinery Fundamentals, McGraw – Hill Collage, August 1998.

[12] http://www.solarbotics.net/starting/200111_dcmotor/200111_dcmotor2.html

[13] http://www.wpi.edu/Pubs/E-project/Available/E-project-

[14] http://quadrotors.blogspot.com/2010_04_01_archive.html

[15] http://forum.allaboutcircuits.com/showthread.php?t=41553

[16] http://www.qariya.com/electronics/handicapped/Mobile_wheel_chair.htm

[17] http://www.IKALOGIC.com

[18] http://www12.fairchildsemi.com/ds/KA/KA331.pdf

APPENDIX

System Software.

```
# include <p18f4550.h>
# include "xlcd.h"
# include <Adc.h>
# pragma config WDT=OFF
# pragma config LVP=OFF
# pragma config FOSC=INTOSC_HS
void XLCDDelay15ms (void)            // insert this section from LCD library to be active to use
{
  int i;
  for(i=0;i<10000;i++)
  {
  Nop();
  }
  return;
}
/*The user  is require to write this 4 milli second delay in his routine,this  delay */
/*is required as it is used in XLCDInit() which is used to initialize the LCD module*/

void XLCDDelay4ms (void)
{
  int i;
  for(i=0;i<2500;i++)
  {
```

```
  Nop();
  }
  return;
}
/*The user  is require to write this 500 nano second in his routine  this  delay */
/*is required as it is used in all read and write commands in the XLCD routines*/

void XLCD_Delay500ns(void)
{
  Nop();
  Nop();
  Nop();
}
/*The user  is require to write this XLCDDelay() in his routine,this is required to write if */
/*the mode selected is by delay , it is used in all XLCD read and write commands of this routine */
void XLCDDelay(void)
  {
  int i;
  for(i=0;i<1000;i++)
    {
    Nop();
    }
  return;
  }
```

```
// For Left and Right motion

void motors_steering (char dir)

        {

                if (dir=='R')                   // if the direction is right; RD0 RD1 RD2 RD3=1011.
                {
                        PORTDbits.RD0=1;

                        PORTDbits.RD1=0;

                        PORTDbits.RD2=1;

                        PORTDbits.RD3=1;

                }

                else if (dir=='L')              // if the direction is left; RD0 RD1 RD2 RD3=0111.


                {
                PORTDbits.RD0=0;

                PORTDbits.RD1=1;

                PORTDbits.RD2=1;

                PORTDbits.RD3=1;

                }


                 else if (dir=='S')             // if the dir. is stop; RD0 RD1 RD2 RD3=0000 or 0101.

                {

                  PORTDbits.RD0=0;

                  PORTDbits.RD1=0 | 1;

                  PORTDbits.RD2=0;

                  PORTDbits.RD3=0 | 1;

                }
```

```
        }
// The motors_moving function For backward and forward motions
        void motors_moving(char dir)
        {
                if (dir=='F')                    // if the direction is forward; RD0 RD1 RD2 RD3=0101.
                {
                        PORTDbits.RD0=0;
                        PORTDbits.RD1=1;
                        PORTDbits.RD2=0;
                        PORTDbits.RD3=1;
                }
        else if (dir=='B')                       // if the direction is backward; RD0 RD1 RD2 RD3=1111.
                {
                        PORTDbits.RD0=1;
                        PORTDbits.RD1=1;
                        PORTDbits.RD2=1;
                        PORTDbits.RD3=1;
                }
         else if (dir='S')                        // if the dir. is stop; RD0 RD1 RD2 RD3=0000 or 0101.
                {
                        PORTDbits.RD0=0;
                        PORTDbits.RD1=0 | 1;
                        PORTDbits.RD2=0;
                        PORTDbits.RD3=0 | 1;

                }
```

```
        }

// The main function is the power function in this code, all calling sentences in the main function and
contains main variable declarations.

void main()

{

        int i;

        char dir;

        PORTD=0;            // clear PORT D

        TRISD=0;            // PORT D is an output port

         PORTA=0;           // clear PORT A

        TRISA=255;          // PORT a is an input port

        PORTAbits.RA0=0;

        TRISAbits.TRISA0=255;


        PORTDbits.RD0=0;

        PORTDbits.RD1=0;

        PORTDbits.RD2=0;

        PORTDbits.RD3=0;


        TRISDbits.TRISD0=0;

        TRISDbits.TRISD1=0;

        TRISDbits.TRISD2=0;

        TRISDbits.TRISD3=0;
```

```
if (PORTAbits.RA0==0b00000001){          // if the input voltage at RA0= 1V
dir='S';                                  // the dir. is stop.
motors_steering(dir);                    // calling to the motors_steering f'n by stop dir.
motors_moving(dir);                      // calling to the motors_moving f'n by stop dir.
}

else if (PORTAbits.RA0==0b00000010){     // if the input voltage at RA0= 2V
dir='F';                                 // the direction is forward
motors_moving(dir);                     // and the function will be calling is moving
}

else if (PORTAbits.RA0==0b00000011){     // if the input voltage at RA0= 3V
dir='B';                                 // the direction is backward
motors_moving(dir);                     // and the function will be calling is moving
}

else if (PORTAbits.RA0==0b00000100){     // if the input voltage at RA0= 4V
dir='L';                                 // the direction is left
motors_steering(dir);                    // and the function will be calling is steering
}

else if(PORTAbits.RA0==0b00000101){      // if the input voltage at RA0= 5V
dir='R' ;                                // the direction is right
motors_steering(dir);                    // and the function will be calling is steering
}
```

```
// This section about (LCD); put string "right" if the direction equal right, put string "left" if the
direction equal left, put string "forward" if the direction equal forward, and so on.
    if(dir=='R')
{
        XLCDInit();
        XLCDPutRamString("RIGHT");
        while(1);
}
    if(dir=='L')
{
        XLCDInit();
        XLCDPutRamString("LEFT");
         while(1);
}
    if(dir=='F'){
        XLCDInit();
        XLCDPutRamString("FORWARD");
  while(1);
    }
    if(dir=='B')
{
        XLCDInit();
        XLCDPutRamString("BACKWARD");
        while(1);
}
```

```
        if(dir=='S')
        {
                XLCDInit();
                XLCDPutRamString("STOP");
     while(1);
        }
// to use an ADC on PIC18F4550 should be insert this code.
        PORTD=0;
        TRISD=0;
         PORTA=0;
        TRISA=255;
        OpenADC(ADC_FOSC_4&ADC_RIGHT_JUST&ADC_4_TAD,
ADC_CH1&ADC_INT_OFF&ADC_VREFPLUS_VDD, ADC_2ANA);
        while(1)
{
                ConvertADC();
                while (BusyADC());
                i=ReadADC();
                PORTD=i>>2;
}
}
```

KA331

V-F Converter

Features

- Guaranteed linearity: 0.01% max.
- Low power dissipation: 15mW at 5V
- Wide range of full scale frequency: 1Hz to 100KHz
- Pulse output compatible with all logic forms
- Wide dynamic range: 100dB min at 10KHz full scale frequency

Description

This voltage to frequency converter provides the output pulse train at a frequency precisely proportional to the applied input voltage. The KA331 can operate at power supplies as low as 4.0V and be changed output frequency from 1Hz to 100KHz. It is ideally suited for use in simple low-cost circuit for analog-to digital conversion, long term integration, linear frequency modulation or demodulation, frequency-to-voltage conversion, and many other functions.

8-DIP

Internal Block Diagram

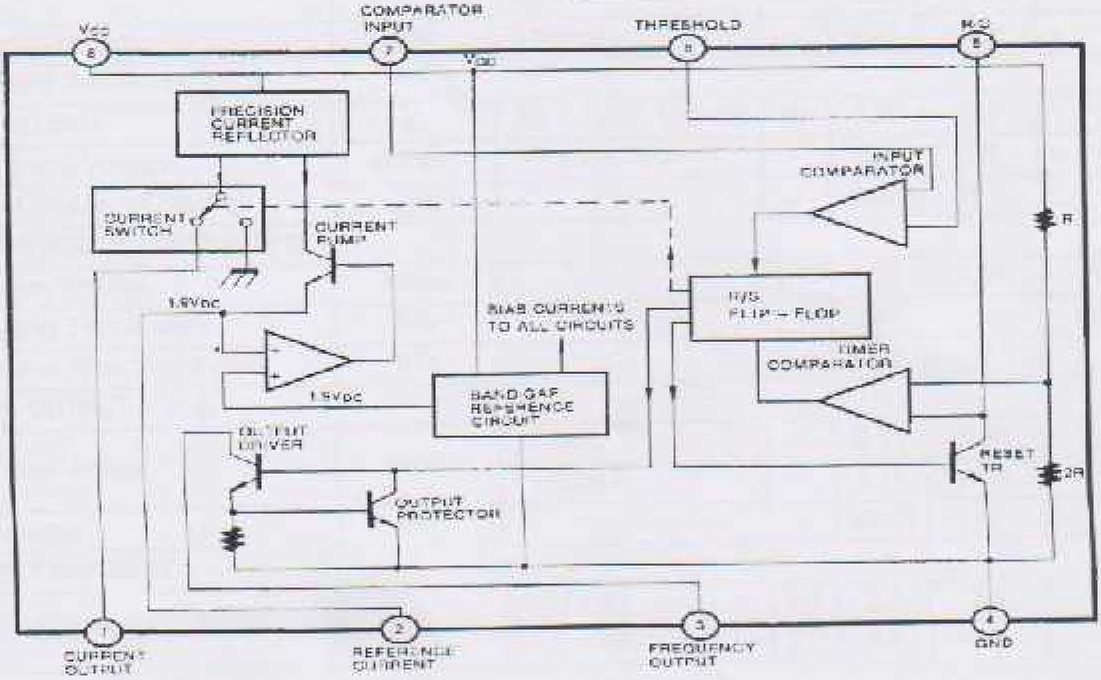

Rev. 1.0.0

Absolute Maximum Ratings (T_A = 25°C)

Parameter	Symbol	Value	Unit
Supply Voltage	V_{CC}	40	V
Input Voltage	V_I	-0.2 ~ + V_{CC}	V
Operating Temperature Range	T_{OPR}	0 ~ +70	°C
Power Dissipation	P_D	500	mW

Electrical Characteristics

Parameter	Symbol	Conditions	Min.	Typ.	Max.	Unit
VFC Non-Linearity	VFCNL	4.5 ≤ V_{CC} ≤ 20V	-	±0.003	±0.01	% Full-Scale
Conversion Accuracy Scale Factor	ACCUR	V_I = -10V, R_S = 14KΩ	0.90	1.00	1.10	KHz/V
Chang Of Gain With V_{CC}	$V_{CC}\Delta G/V_{CC}$	4.5V ≤ V_{CC} ≤ 10V	-	0.01	0.1	%/V
		10V ≤ V_{CC} ≤ 40V	-	0.006	0.06	
Rated Full - Scale Frequency	f	V_I = -10V	10.0	-	-	KHz
INPUT COMPARATOR						
Offset Voltage	V_{IO}	0°C ≤ T_A ≤ +70°C	-	±3	±10	mV
Bias Current	I_{BIAS}	-	-	-80	-300	nA
Offset Current	I_{IO}	-	-	±8	±100	nA
Common-Mode Range	V_{CM}	0°C ≤ T_A ≤ +70°C	-0.2	-	V_{CC}-2.0	V
TIMER (PIN 5)						
Timer Threshold Voltage	V_{TH}	-	0.63	0.667	0.701	xV_{CC}
Input Bias Current	I_{BIAS}	V_{CC} = 15V, 0V ≤ V_5 ≤ 9.9V	-	±10	±100	nA
		V_5 = 10V	-	200	1000	nA
Saturation Voltage	V_{SAT}	I = 5mA	-	0.22	0.5	V
CURRENT SOURCE (PIN 1)						
Output Current	I_O	R_S = 14KΩ, V_1 = 0V	116	136	156	µA
Change with Voltage	$\Delta I_O/\Delta V_1$	0V ≤ V_1 ≤ 10V	-	0.2	1.0	µA
Current Source Off Leakage	I_{LKG}	-	-	0.02	10.0	nA
REFERENCE VOLTAGE (PIN 2)						
Reference Voltage	V_{REF}	-	1.70	1.89	2.08	V_{DC}
Stability vs Temperature	ST_T	-	-	±60	-	ppm/°C
Stability vs Time, 1000Hours	ST_T	-	-	±0.1	-	%
LOGIC OUTPUT (Pin 3)						
Saturation Voltage	V_{SAT}	I = 5mA	-	0.15	0.50	V
		I = 3.2mA	-	0.10	0.40	
Off Leakage	I_{LKG}	-	-	±0.05	1.0	µA
SUPPLY CURRENT						
Supply Current	I_{CC}	V_{CC} = 5V	1.5	3.0	6.0	mA
		V_{CC} = 40V	2.0	4.0	8.0	

Typical Applications

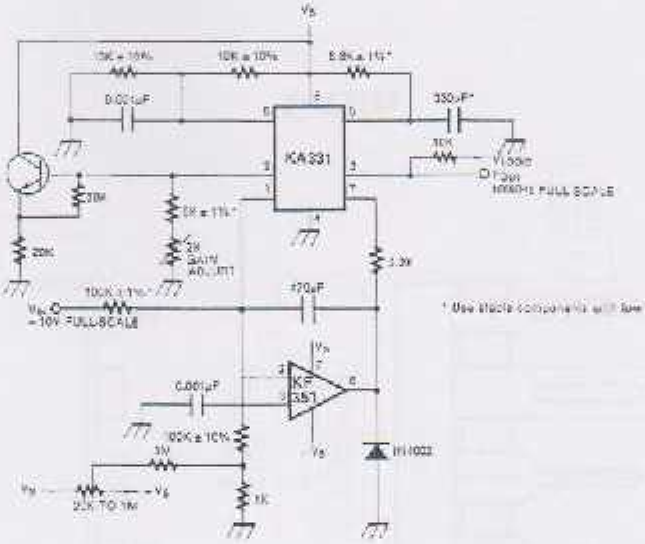

* Use stable components with low temperature coefficients

Figure 1. Precision Voltage-to-Frequency Converter, 100KHz Full-Scale

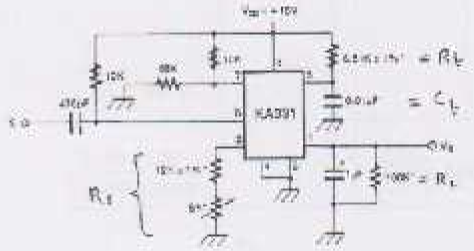

$V_{out} = f_{in} * 2.09 * \frac{R_s}{R_s} * (R_t C_t)$

Figure 2. Simple Frequency-to-Voltage Converter, 10KHz Full-Scale

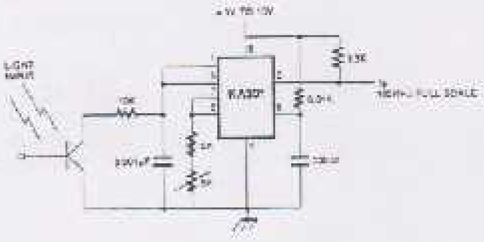

Figure 3. Light Intensity to Frequency Converter

Mechanical Dimensions

Package

Dimensions in millimeters

8-DIP

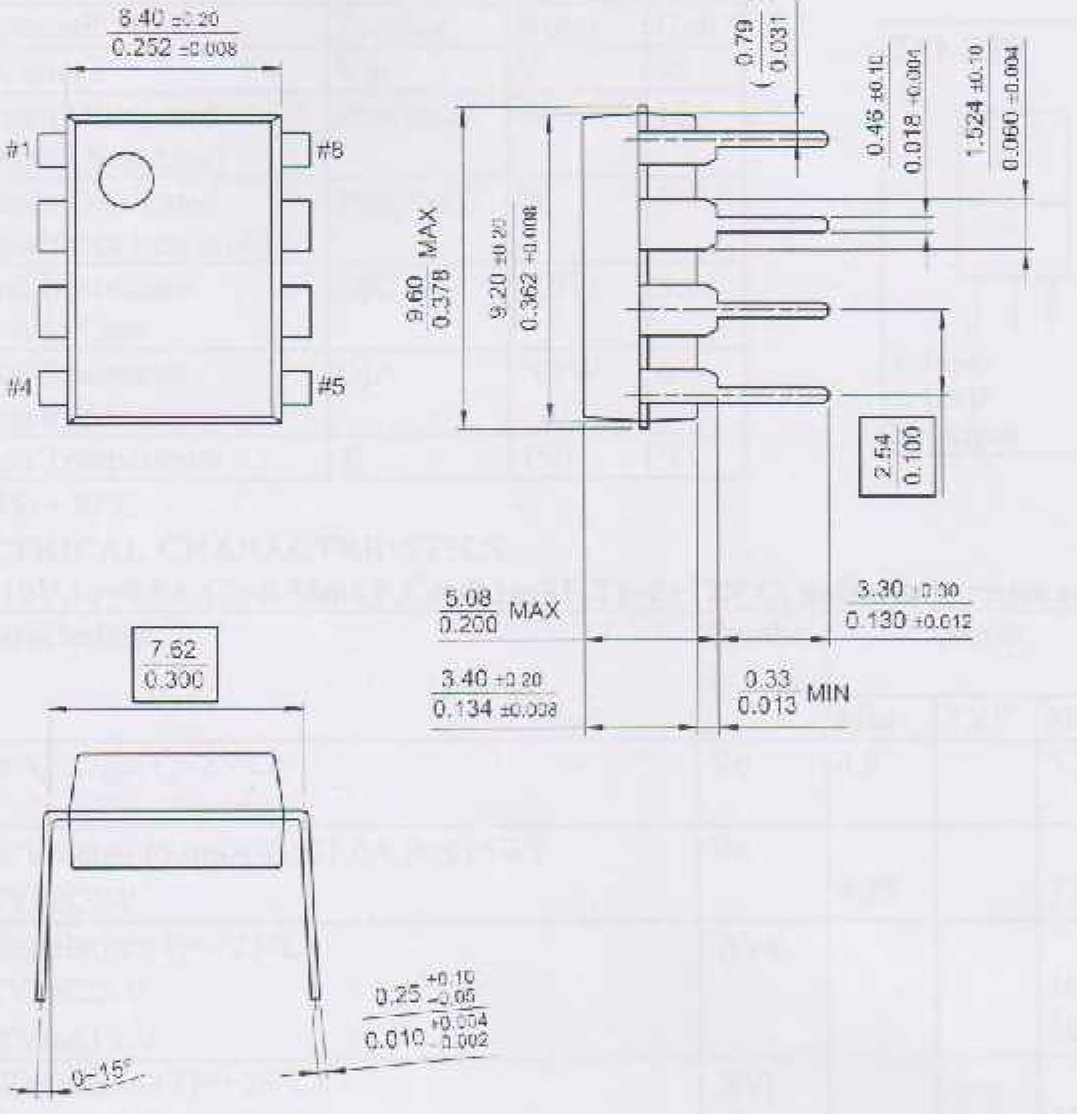

7805• THREE-TERMINAL POSITIVE VOLTAGE REGULATOR IC

EATURES :
- OUTPUT CURRENT IN EXCESS OF 1A;
- NO EXTERNAL COMPONENTS REQUIRED;
- INTERNAL SHORT CIRCUIT CURRENT LIMITING;
- INTERNAL THERMAL OVERLOAD PROTECTION;
- OUTPUT TRANSISTOR SAFE-AREA COMPENSATION;
- OUTPUT VOLTAGE OFFERED IN 4% TOLERANCE.

BSOLUTE MAXIMUM RATINGS (Ta= 25° C)

haracteristic	Symbol	Norm	Unit
nput Voltage	Vin	V	35
aximum Dissipated ower(with heat sink)	Ptot(max)	W	15
aximum Dissipated ower(without heat sink)	Ptot(max)	W	1.5
hermal Resistance unction to Case	OjC	°C/W	5.0
hermal Resistance, unction to Air	OjA	°C/W	65
unction Temperature	T_j	150	°C

TO-220

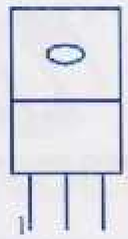

1. Input
2. GND
3. Output

Tc=-45÷+70°C

LECTRICAL CHARACTERISTICS

Vin=10V,Io=0.5A,Ci=0.33mkF,Co=0.1mkF,Tj=0+125°C, unless otherwise noted.)

Characteristic	Symbol	Norm			Unit
		Min	TYP	Max	
utput Voltage(Tj=25°C)	Vo	4.8		5.2	V
utput Voltage (5.0mA≤Io≤1.0A,Po≤15W) .0V≤Vin≤20V	Vo	4.75		5.25	V
ine Regulation(Tj=+25°C) .0V≤Vin≤25 V .0 V≤Vin≤12 V	ΔVv			100 50	mV
oad Regulation(Tj=+25°C) .0mA≤Io≤1.5A .25A≤Io≤0.75A	ΔVi			100 50	mV
uiescent Current(Tj=+25°C)	Ib			8.0	mA
uiescent Current Change7.0 V≤Vin≤25 V .0mA≤Io≤1.0 A	ΔIb			1.3 0.5	mA
ropout Voltage(Io=1.0A,Tj=+25°C)	Vi-Vo		2.0		V
hort Circuit Current Limit(Ta=+25°C),Vin=35V	Isc		0.4		A
eak Output Current(Tj=+25°C)	Imax		2.2		A
erage Temperature Coefficient of Output Voltage	TCVo		0.3		mV/°C

MICROCHIP

PIC18F2455/2550/4455/4550 Data Sheet

28/40/44-Pin, High-Performance, Enhanced Flash, USB Microcontrollers with nanoWatt Technology

Note the following details of the code protection feature on Microchip devices:

- Microchip products meet the specification contained in their particular Microchip Data Sheet.
- Microchip believes that its family of products is one of the most secure families of its kind on the market today, when used in the intended manner and under normal conditions.
- There are dishonest and possibly illegal methods used to breach the code protection feature. All of these methods, to our knowledge, require using the Microchip products in a manner outside the operating specifications contained in Microchip's Data Sheets. Most likely, the person doing so is engaged in theft of intellectual property.
- Microchip is willing to work with the customer who is concerned about the integrity of their code.
- Neither Microchip nor any other semiconductor manufacturer can guarantee the security of their code. Code protection does not mean that we are guaranteeing the product as "unbreakable."

Code protection is constantly evolving. We at Microchip are committed to continuously improving the code protection features of our products. Attempts to break Microchip's code protection feature may be a violation of the Digital Millennium Copyright Act. If such acts allow unauthorized access to your software or other copyrighted work, you may have a right to sue for relief under that Act.

Trademarks

The Microchip name and logo, the Microchip logo, Accuron, dsPIC, KeeLoq, microID, MPLAB, PIC, PICmicro, PICSTART, PRO MATE, PowerSmart, rfPIC and SmartShunt are registered trademarks of Microchip Technology Incorporated in the U.S.A. and other countries.

AmpLab, FilterLab, Migratable Memory, MXDEV, MXLAB, PICMASTER, SEEVAL, SmartSensor and The Embedded Control Solutions Company are registered trademarks of Microchip Technology Incorporated in the U.S.A.

Analog-for-the-Digital Age, Application Maestro, dsPICDEM, dsPICDEM.net, dsPICworks, ECAN, ECONOMONITOR, FanSense, FlexROM, fuzzyLAB, In-Circuit Serial Programming, ICSP, ICEPIC, Linear Active Thermistor, MPASM, MPLIB, MPLINK, MPSIM, PICkit, PICDEM, PICDEM.net, PICLAB, PICtail, PowerCal, PowerInfo, PowerMate, PowerTool, Real ICE, rfLAB, rfPICDEM, Select Mode, Smart Serial, SmartTel, Total Endurance, UNI/O, WiperLock and Zena are trademarks of Microchip Technology Incorporated in the U.S.A. and other countries.

SQTP is a service mark of Microchip Technology Incorporated in the U.S.A.

All other trademarks mentioned herein are property of their respective companies.

Printed on recycled paper.

QUALITY MANAGEMENT SYSTEM
CERTIFIED BY DNV
ISO/TS 16949:2002

Microchip received ISO/TS-16949:2002 quality system certification for its worldwide headquarters, design and wafer fabrication facilities in Chandler and Tempe, Arizona and Mountain View, California in October 2003. The Company's quality system processes and procedures are for its PICmicro® 8-bit MCUs, KEELOQ® code hopping devices, Serial EEPROMs, microperipherals, nonvolatile memory and analog products. In addition, Microchip's quality system for the design and manufacture of development systems is ISO 9001:2000 certified.

MICROCHIP

PIC18F2455/2550/4455/4550

28/40/44-Pin, High-Performance, Enhanced Flash, USB Microcontrollers with nanoWatt Technology

Universal Serial Bus Features:

- USB V2.0 Compliant
- Low Speed (1.5 Mb/s) and Full Speed (12 Mb/s)
- Supports Control, Interrupt, Isochronous and Bulk Transfers
- Supports up to 32 Endpoints (16 bidirectional)
- 1-Kbyte Dual Access RAM for USB
- On-Chip USB Transceiver with On-Chip Voltage Regulator
- Interface for Off-Chip USB Transceiver
- Streaming Parallel Port (SPP) for USB streaming transfers (40/44-pin devices only)

Power-Managed Modes:

- Run: CPU on, peripherals on
- Idle: CPU off, peripherals on
- Sleep: CPU off, peripherals off
- Idle mode currents down to 5.8 µA typical
- Sleep mode currents down to 0.1 µA typical
- Timer1 Oscillator: 1.1 µA typical, 32 kHz, 2V
- Watchdog Timer: 2.1 µA typical
- Two-Speed Oscillator Start-up

Flexible Oscillator Structure:

- Four Crystal modes, including High Precision PLL for USB
- Two External Clock modes, up to 48 MHz
- Internal Oscillator Block:
  - 8 user-selectable frequencies, from 31 kHz to 8 MHz
  - User-tunable to compensate for frequency drift
- Secondary Oscillator using Timer1 @ 32 kHz
- Dual Oscillator options allow microcontroller and USB module to run at different clock speeds
- Fail-Safe Clock Monitor:
  - Allows for safe shutdown if any clock stops

Peripheral Highlights:

- High-Current Sink/Source: 25 mA/25 mA
- Three External Interrupts
- Four Timer modules (Timer0 to Timer3)
- Up to 2 Capture/Compare/PWM (CCP) modules:
  - Capture is 16-bit, max. resolution 5.2 ns (TCY/16)
  - Compare is 16-bit, max. resolution 83.3 ns (TCY)
  - PWM output: PWM resolution is 1 to 10-bit
- Enhanced Capture/Compare/PWM (ECCP) module:
  - Multiple output modes
  - Selectable polarity
  - Programmable dead time
  - Auto-shutdown and auto-restart
- Enhanced USART module:
  - LIN bus support
- Master Synchronous Serial Port (MSSP) module supporting 3-wire SPI (all 4 modes) and I²C™ Master and Slave modes
- 10-bit, up to 13-channel Analog-to-Digital Converter module (A/D) with Programmable Acquisition Time
- Dual Analog Comparators with Input Multiplexing

Special Microcontroller Features:

- C Compiler Optimized Architecture with optional Extended Instruction Set
- 100,000 Erase/Write Cycle Enhanced Flash Program Memory typical
- 1,000,000 Erase/Write Cycle Data EEPROM Memory typical
- Flash/Data EEPROM Retention: > 40 years
- Self-Programmable under Software Control
- Priority Levels for Interrupts
- 8 x 8 Single-Cycle Hardware Multiplier
- Extended Watchdog Timer (WDT):
  - Programmable period from 41 ms to 131s
- Programmable Code Protection
- Single-Supply 5V In-Circuit Serial Programming™ (ICSP™) via two pins
- In-Circuit Debug (ICD) via two pins
- Optional dedicated ICD/ICSP port (44-pin devices only)
- Wide Operating Voltage Range (2.0V to 5.5V)

Device	Program Memory		Data Memory		I/O	10-Bit A/D (ch)	CCP/ECCP (PWM)	SPP	MSSP		EAUSART	Comparators	Timers 8/16-Bit
	Flash (bytes)	# Single-Word Instructions	SRAM (bytes)	EEPROM (bytes)					SPI	Master I²C™			
PIC18F2455	24K	12288	2048	256	24	10	2/0	No	Y	Y	1	2	1/3
PIC18F2550	32K	16384	2048	256	24	10	2/0	No	Y	Y	1	2	1/3
PIC18F4455	24K	12288	2048	256	35	13	1/1	Yes	Y	Y	1	2	1/3
PIC18F4550	32K	16384	2048	256	35	13	1/1	Yes	Y	Y	1	2	1/3

Pin Diagrams

28-Pin PDIP, SOIC

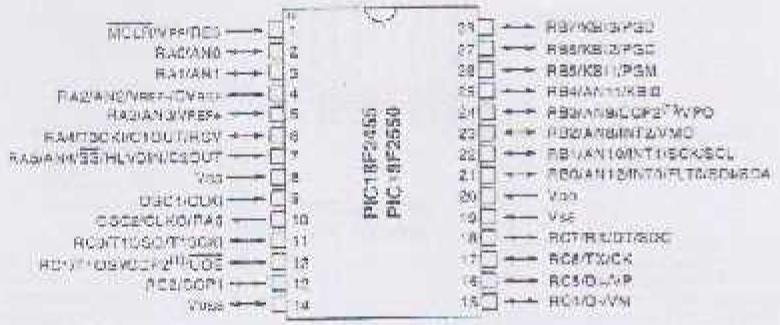

40-Pin PDIP

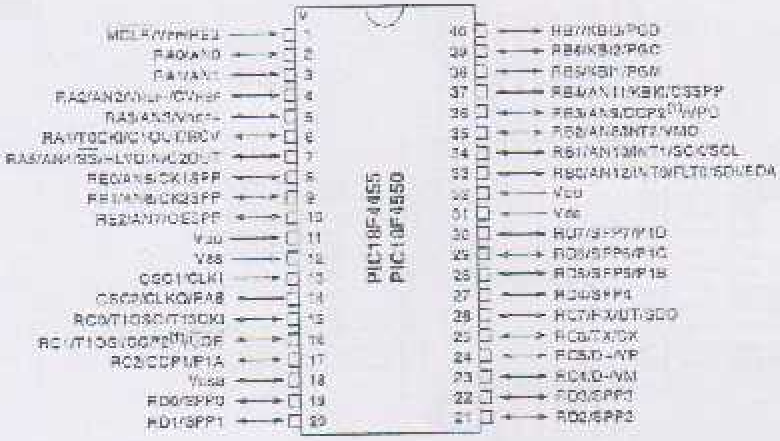

Note 1: RB3 is the alternate pin for CCP2 multiplexing.

Pin Diagrams (Continued)

44-Pin TQFP

The SN54LS07 and SN74LS17 are obsolete and are no longer supplied.

SN54LS07, SN74LS07, SN74LS17
HEX BUFFERS/DRIVERS
WITH OPEN-COLLECTOR HIGH-VOLTAGE OUTPUTS

SDLS021C – MAY 1990 – REVISED FEBRUARY 2004

- Convert TTL Voltage Levels to MOS Levels
- High Sink-Current Capability
- Input Clamping Diodes Simplify System Design
- Open-Collector Driver for Indicator Lamps and Relays

SN54LS07 . . . J PACKAGE
SN74LS07, SN74LS17 . . . D, DB, N, OR NS PACKAGE
(TOP VIEW)

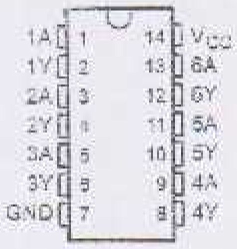

description/ordering information

These hex buffers/drivers feature high-voltage open-collector outputs to interface with high-level circuits or for driving high-current loads. They are also characterized for use as buffers for driving TTL inputs. The 'LS07 devices have a rated output voltage of 30 V, and the SN74LS17 has a rated output voltage of 15 V. The maximum sink current is 30 mA for the SN54LS07 and 40 mA for the SN74LS07 and SN74LS17.

These circuits are compatible with most TTL families. Inputs are diode-clamped to minimize transmission-line effects, which simplifies design. Typical power dissipation is 140 mW, and average propagation delay time is 12 ns.

ORDERING INFORMATION

T_A	PACKAGE†		ORDERABLE PART NUMBER	TOP-SIDE MARKING
0°C to 70°C	PDIP – N	Tube	SN74LS07N	SN74LS07N
	SOIC – D	Tube	SN74LS07D	LS07
		Tape and reel	SN74LS07DR	
	SOP – NS	Tape and reel	SN74LS07NSR	74LS07
	SSOP – DB	Tape and reel	SN74LS07DBR	LS07

† Package drawings, standard packing quantities, thermal data, symbolization, and PCB design guidelines are available at www.ti.com/sc/package.

logic diagram (positive logic)

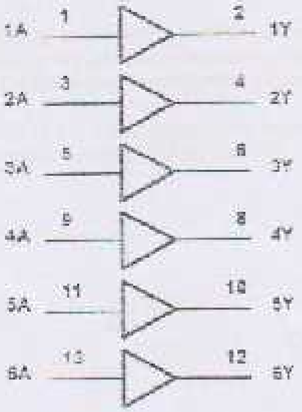

The SN54LS07 and SN74LS17 are obsolete and are no longer supplied.

schematic (each gate)

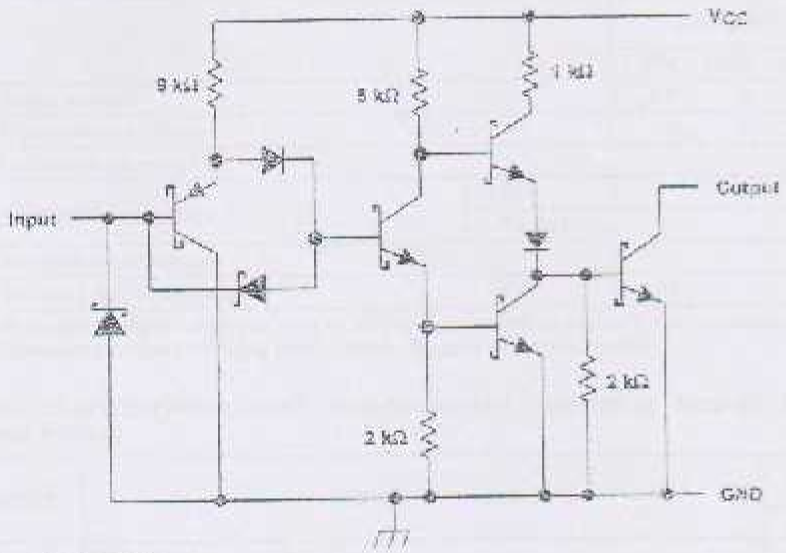

Resistor values shown are nominal.

absolute maximum ratings over operating free-air temperature range (unless otherwise noted)†

Supply voltage, V_{CC}		7 V
Input voltage, V_I (see Note 1)		7 V
Output voltage, V_O (see Notes 1 and 2):	SN54LS07, SN74LS07	30 V
	SN74LS17	15 V
Package thermal impedance, θ_{JA} (see Note 3):	D package	86°C/W
	DB package	96°C/W
	N package	80°C/W
	NS package	76°C/W
Storage temperature range, T_{stg}		−65°C to 150°C

† Stresses beyond those listed under "absolute maximum ratings" may cause permanent damage to the device. These are stress ratings only, and functional operation of the device at these or any other conditions beyond those indicated under "recommended operating conditions" is not implied. Exposure to absolute-maximum-rated conditions for extended periods may affect device reliability.

NOTES: 1. All voltage values are with respect to GND.
2. This is the maximum voltage that should be applied to any output when it is in the off state.
3. The package thermal impedance is calculated in accordance with JESD 51-7.

recommended operating conditions (see Note 4)

			SN54LS07			SN74LS07 SN74LS17			UNIT
			MIN	NOM	MAX	MIN	NOM	MAX	
V_{CC}	Supply voltage		4.5	5	5.5	4.75	5	5.25	V
V_{IH}	High-level input voltage		2			2			V
V_{IL}	Low-level input voltage				0.8			0.8	V
V_{OH}	High-level output voltage	'LS07			30			30	V
		SN74LS17						15	
I_{OL}	Low-level output current				30			40	mA
T_A	Operating free-air temperature		−55		125	0		70	°C

NOTE 4: All unused inputs of the device must be held at V_{CC} or GND to ensure proper device operation. Refer to the TI application report, *Implications of Slow or Floating CMOS Inputs*, literature number SCBA004.

electrical characteristics over recommended operating free-air temperature range (unless otherwise noted)

PARAMETER	TEST CONDITIONS†			SN54LS07		SN74LS07 SN74LS17		UNIT
				MIN	MAX	MIN	MAX	
V_{IK}	V_{CC} = MIN,	I_I = −12 mA			−1.5		−1.5	V
I_{OH}	V_{CC} = MIN,	V_{IH} = 2 V	'LS07, V_{OH} = 30 V		0.25		0.25	mA
			SN74LS17, V_{OH} = 15 V				0.25	
V_{OL}	V_{CC} = MIN,	V_{IL} = 0.8 V	I_{OL} = 16 mA		0.4		0.4	V
			I_{OL} = MAX§		0.7		0.7	
I_I	V_{CC} = MAX,	V_I = 7 V			1		1	mA
I_{IH}	V_{CC} = MAX,	V_I = 2.4 V			20		20	μA
I_{IL}	V_{CC} = MAX,	V_I = 0.4 V			−0.2		−0.2	mA
I_{CCH}	V_{CC} = MAX				14		14	mA
I_{CCL}	V_{CC} = MAX				45		45	mA

† For conditions shown as MIN or MAX, use the appropriate value specified under *recommended operating conditions*.

§ I_{OL} = 30 mA for SN54 series parts and 40 mA for SN74 series parts.

switching characteristics, V_{CC} = 5 V, T_A = 25°C (see Figure 1)

PARAMETER	FROM (INPUT)	TO (OUTPUT)	TEST CONDITIONS		MIN	TYP	MAX	UNIT
t_{PLH}	A	Y	R_L = 110 Ω,	C_L = 15 pF		6	10	ns
t_{PHL}						19	30	

PARAMETER MEASUREMENT INFORMATION

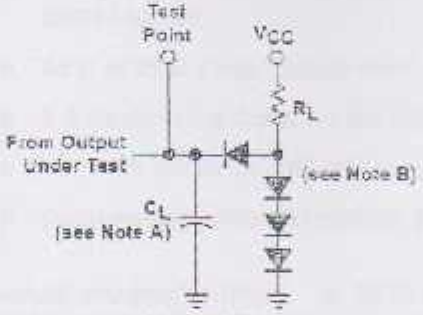

LOAD CIRCUIT
FOR 2-STATE TOTEM-POLE OUTPUTS

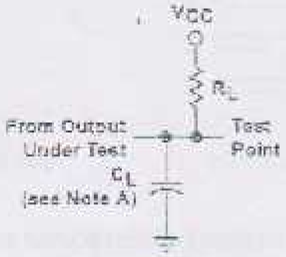

LOAD CIRCUIT
FOR OPEN-COLLECTOR OUTPUTS

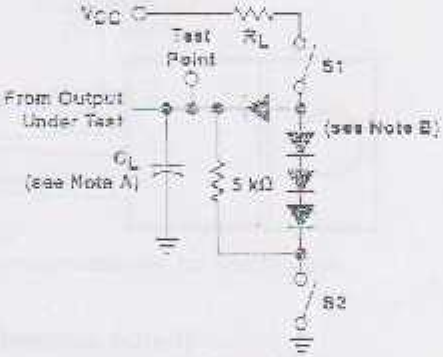

LOAD CIRCUIT
FOR 3-STATE OUTPUTS

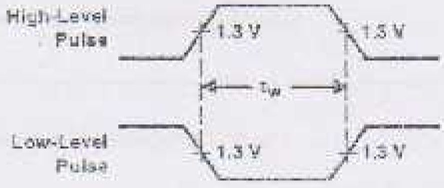

VOLTAGE WAVEFORMS
PULSE DURATIONS

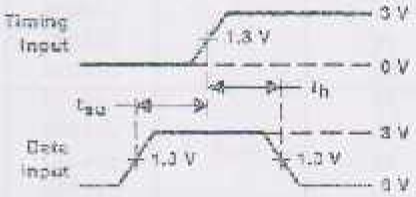

VOLTAGE WAVEFORMS
SETUP AND HOLD TIMES

TRANSYS ELECTRONICS LIMITED

BD241, BD241A, BD241B, BD241C
NPN SILICON POWER TRANSISTORS

- **Designed for Complementary Use with the BD242 Series**
- **40 W at 25˚C Case Temperature**
- **3 A Continuous Collector Current**
- **5 A Peak Collector Current**
- **Customer-Specified Selections Available**

TO-220 PACKAGE
(TOP VIEW)

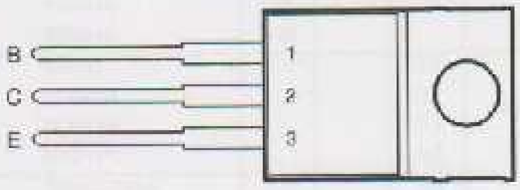

Pin 2 is in electrical contact with the mounting base.

absolute maximum ratings **at 25˚C case temperature (unless otherwise noted)**

RATING		SYMBOL	VALUE	UNIT
Collector-emitter voltage (R_{BE} = 100 Ω)	BD241	V_{CER}	55	V
	BD241A		70	
	BD241B		90	
	BD241C		115	
Collector-emitter voltage (I_C = 30 mA)	BD241	V_{CEO}	45	V
	BD241A		60	
	BD241B		80	
	BD241C		100	
Emitter-base voltage		V_{EBO}	5	V
Continuous collector current		I_C	3	A
Peak collector current (see Note 1)		I_{CM}	5	A
Continuous base current		I_B	1	A
Continuous device dissipation at (or below) 25˚C case temperature (see Note 2)		P_{tot}	40	W
Continuous device dissipation at (or below) 25˚C free air temperature (see Note 3)		P_{tot}	2	W
Unclamped inductive load energy (see Note 4)		$½LI_C^2$	32	mJ
Operating junction temperature range		T_j	-65 to +150	˚C
Storage temperature range		T_{stg}	-65 to +150	˚C
Lead temperature 3.2 mm from case for 10 seconds		T_L	250	˚C

NOTES:
1. This value applies for $t_p \leq 0.3$ ms, duty cycle ≤ 10%.
2. Derate linearly to 150˚C case temperature at the rate of 0.32 W/˚C.
3. Derate linearly to 150˚C free air temperature at the rate of 16 mW/˚C.
4. This rating is based on the capability of the transistor to operate safely in a circuit of: L = 20 mH, $I_{B(on)}$ = 0.4 A, R_{BE} = 100 Ω, $V_{BE(off)}$ = 0, R_S = 0.1 Ω, V_{CC} = 20 V.

electrical characteristics at 25°C case temperature

PARAMETER		TEST CONDITIONS			MIN	TYP	MAX	UNIT
$V_{(BR)CEO}$	Collector-emitter breakdown voltage	I_C = 30 mA (see Note 5)	$I_B = 0$	BD241	45			V
				BD241A	60			
				BD241B	80			
				BD241C	100			
I_{CES}	Collector-emitter cut-off current	V_{CE} = 55 V	$V_{BE} = 0$	BD241			0.2	mA
		V_{CE} = 70 V	$V_{BE} = 0$	BD241A			0.2	
		V_{CE} = 90 V	$V_{BE} = 0$	BD241B			0.2	
		V_{CE} = 115 V	$V_{BE} = 0$	BD241C			0.2	
I_{CEO}	Collector cut-off current	V_{CE} = 30 V	$I_B = 0$	BD241/241A			0.3	mA
		V_{CE} = 60 V	$I_B = 0$	BD241B/241C			0.3	
I_{EBO}	Emitter cut-off current	V_{EB} = 5 V	$I_C = 0$				1	mA
h_{FE}	Forward current transfer ratio	V_{CE} = 4 V	I_C = 1 A	(see Notes 5 and 6)	25			
		V_{CE} = 4 V	I_C = 3 A		10			
$V_{CE(sat)}$	Collector-emitter saturation voltage	I_B = 0.6 A	I_C = 3 A	(see Notes 5 and 6)			1.2	V
V_{BE}	Base-emitter voltage	V_{CE} = 4 V	I_C = 3 A	(see Notes 5 and 6)			1.8	V
h_{fe}	Small signal forward current transfer ratio	V_{CE} = 10 V	I_C = 0.5 A	f = 1 kHz	20			
$\|h_{fe}\|$	Small signal forward current transfer ratio	V_{CE} = 10 V	I_C = 0.5 A	f = 1 MHz	3			

NOTES: 5. These parameters must be measured using pulse techniques, t_p = 300 µs, duty cycle ≤ 2%.
6. These parameters must be measured using voltage-sensing contacts, separate from the current carrying contacts.

thermal characteristics

PARAMETER		MIN	TYP	MAX	UNIT
$R_{\theta JC}$	Junction to case thermal resistance			3.125	°C/W
$R_{\theta JA}$	Junction to free air thermal resistance			62.5	°C/W

resistive-load-switching characteristics at 25°C case temperature

PARAMETER		TEST CONDITIONS †			MIN	TYP	MAX	UNIT
t_{on}	Turn-on time	I_C = 1 A	$I_{B(on)}$ = 0.1 A	$I_{B(off)}$ = -0.1 A		0.3		µs
t_{off}	Turn-off time	$V_{BE(off)}$ = -3.7 V	R_L = 20 Ω	t_p = 20 µs, dc ≤ 2%		1		µs

† Voltage and current values shown are nominal; exact values vary slightly with transistor parameters.

TYPICAL CHARACTERISTICS

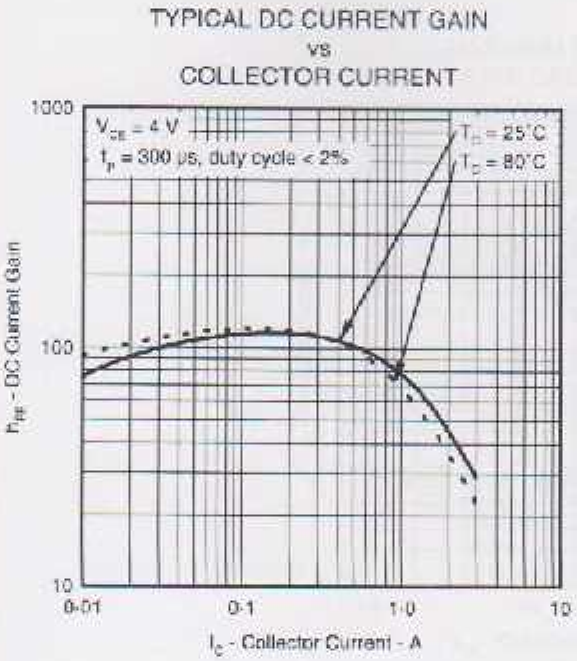
TYPICAL DC CURRENT GAIN
vs
COLLECTOR CURRENT

Figure 1.

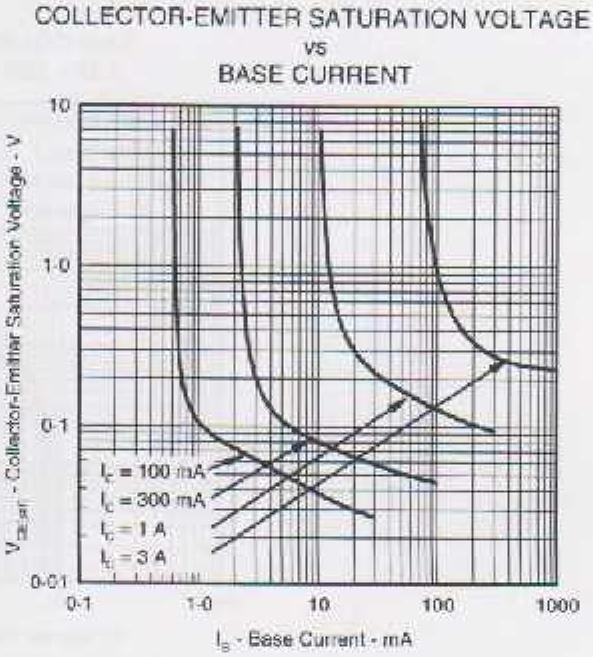
COLLECTOR-EMITTER SATURATION VOLTAGE
vs
BASE CURRENT

Figure 2.

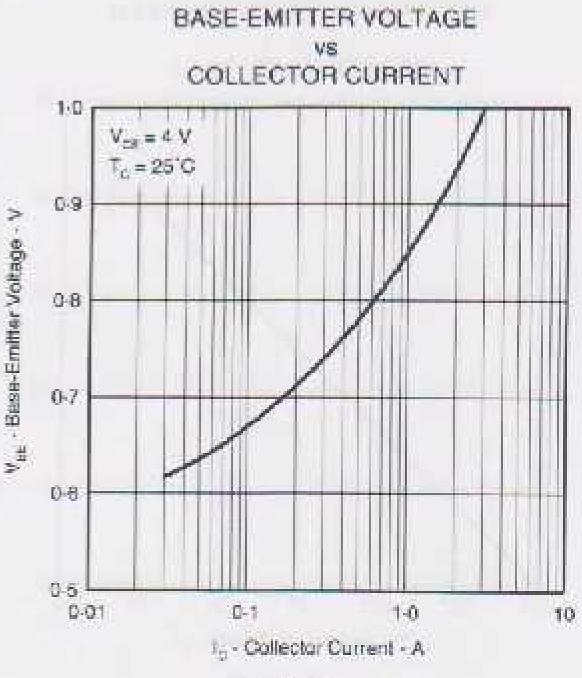
BASE-EMITTER VOLTAGE
vs
COLLECTOR CURRENT

Figure 3.

MAXIMUM SAFE OPERATING REGIONS

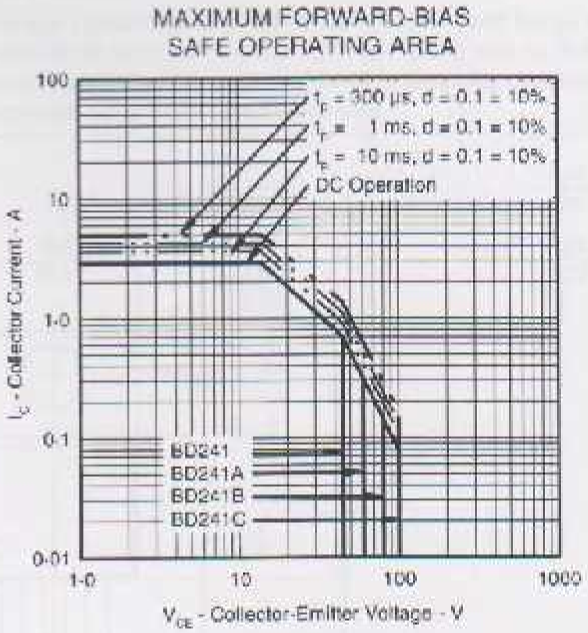

Figure 4.

THERMAL INFORMATION

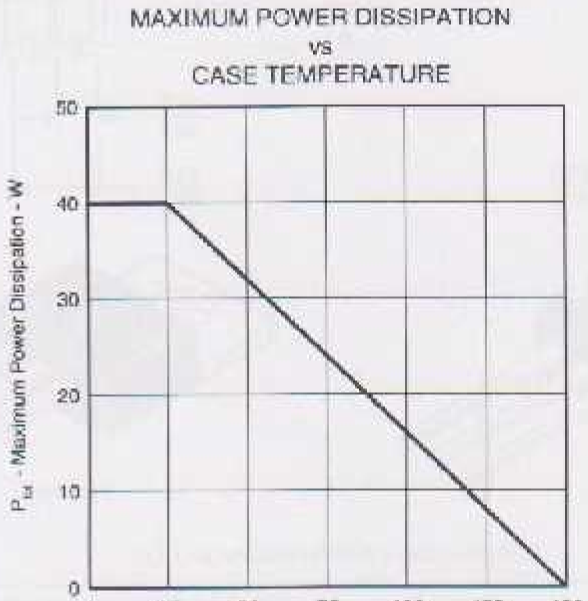

Figure 5.

MECHANICAL DATA

TO-220

3-pin plastic flange-mount package

This single-in-line package consists of a circuit mounted on a lead frame and encapsulated within a plastic compound. The compound will withstand soldering temperature with no deformation, and circuit performance characteristics will remain stable when operated in high humidity conditions. Leads require no additional cleaning or processing when used in soldered assembly.

TO220

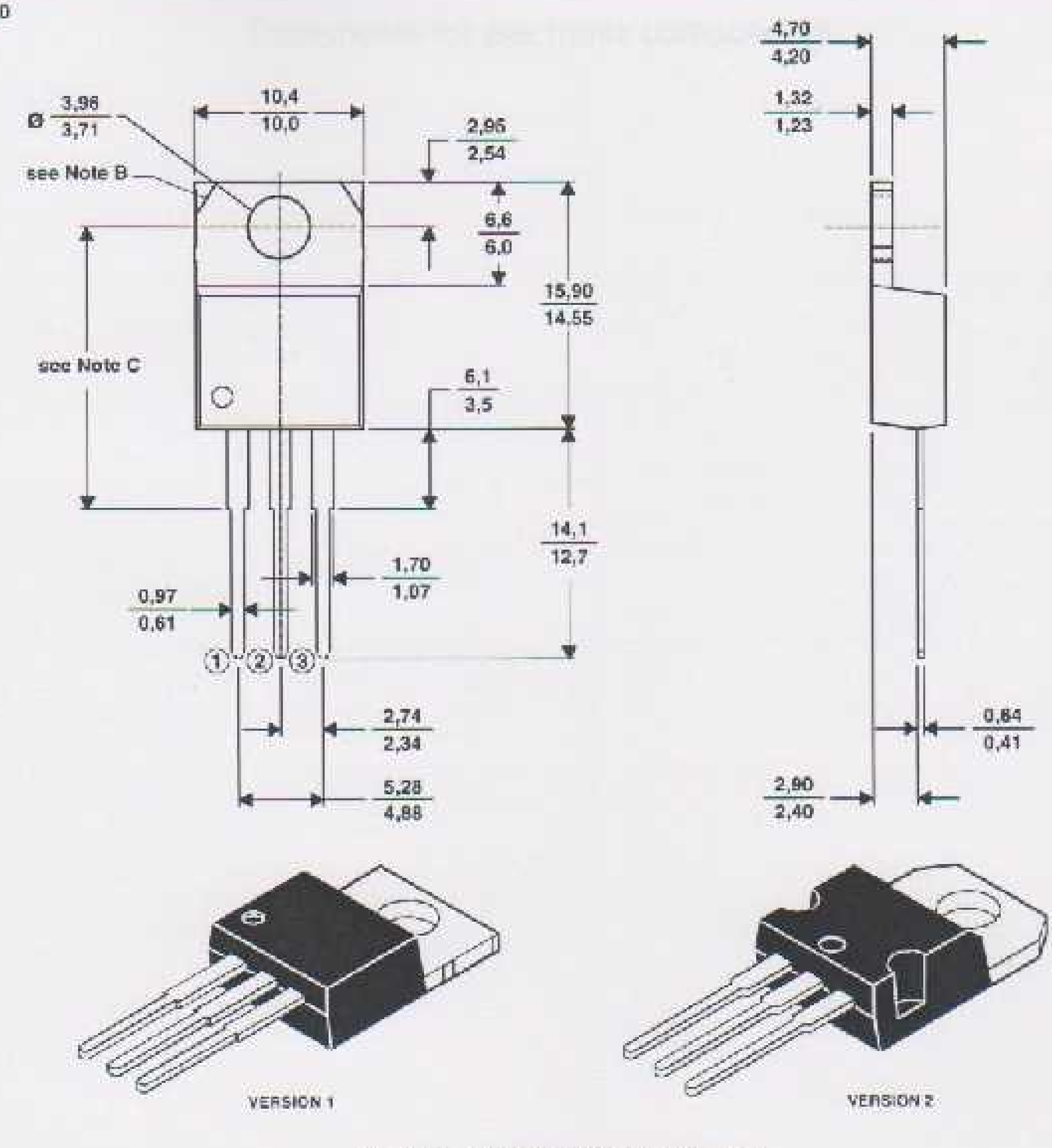

ALL LINEAR DIMENSIONS IN MILLIMETERS

NOTES: A. The centre pin is in electrical contact with the mounting tab.
B. Mounting tab corner profile according to package version.
C. Typical fixing hole centre stand off height according to package version.
Version 1, 18.0 mm. Version 2, 17.6 mm.

BD249, BD249A, BD249B, BD249C
NPN SILICON POWER TRANSISTORS

BOURNS®

- **Designed for Complementary Use with the BD250 Series**
- **125 W at 25°C Case Temperature**
- **25 A Continuous Collector Current**
- **40 A Peak Collector Current**
- **Customer-Specified Selections Available**

SOT-93 PACKAGE
(TOP VIEW)

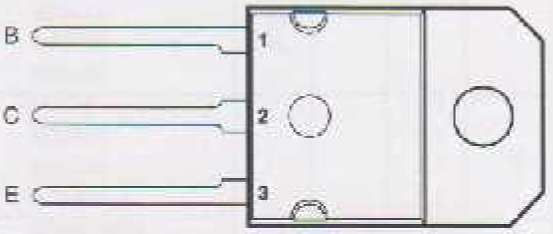

Pin 2 is in electrical contact with the mounting base.

MDTRAAA

absolute maximum ratings at 25°C case temperature (unless otherwise noted)

RATING		SYMBOL	VALUE	UNIT
Collector-emitter voltage (R_{BE} = 100 Ω)	BD249	V_{CER}	55	V
	BD249A		70	
	BD249B		90	
	BD249C		115	
Collector-emitter voltage (I_C = 30 mA)	BD249	V_{CEO}	45	V
	BD249A		60	
	BD249B		80	
	BD249C		100	
Emitter-base voltage		V_{EBO}	5	V
Continuous collector current		I_C	25	A
Peak collector current (see Note 1)		I_{CM}	40	A
Continuous base current		I_B	5	A
Continuous device dissipation at (or below) 25°C case temperature (see Note 2)		P_{tot}	125	W
Continuous device dissipation at (or below) 25°C free air temperature (see Note 3)		P_{tot}	3	W
Unclamped inductive load energy (see Note 4)		$½LI_C^2$	90	mJ
Operating junction temperature range		T_j	-65 to +150	°C
Storage temperature range		T_{stg}	-65 to +150	°C
Lead temperature 3.2 mm from case for 10 seconds		T_L	250	°C

NOTES: 1. This value applies for $t_p \leq 0.3$ ms, duty cycle ≤ 10%.
2. Derate linearly to 150°C case temperature at the rate of 1 W/°C.
3. Derate linearly to 150°C free air temperature at the rate of 24 mW/°C.
4. This rating is based on the capability of the transistor to operate safely in a circuit of: L = 20 mH, $I_{B(on)}$ = 0.4 A, R_{BE} = 100 Ω, $V_{BE(off)}$ = 0, R_S = 0.1 Ω, V_{CC} = 20 V.

JUNE 1973 - REVISED SEPTEMBER 2002

electrical characteristics at 25°C case temperature

PARAMETER		TEST CONDITIONS			MIN	TYP	MAX	UNIT
$V_{(BR)CEO}$	Collector-emitter breakdown voltage	I_C = 30 mA (see Note 5)	I_B = 0	BD249	45			V
				BD249A	60			
				BD249B	80			
				BD249C	100			
I_{CES}	Collector-emitter cut-off current	V_{CE} = 55 V	V_{BE} = 0	BD249			0.7	mA
		V_{CE} = 70 V	V_{BE} = 0	BD249A			0.7	
		V_{CE} = 90 V	V_{BE} = 0	BD249B			0.7	
		V_{CE} = 115 V	V_{BE} = 0	BD249C			0.7	
I_{CEO}	Collector cut-off current	V_{CE} = 30 V	I_B = 0	BD249/249A			1	mA
		V_{CE} = 60 V	I_B = 0	BD249B/249C			1	
I_{EBO}	Emitter cut-off current	V_{EB} = 5 V	I_C = 0				1	mA
h_{FE}	Forward current transfer ratio	V_{CE} = 4 V	I_C = 1.5 A	(see Notes 5 and 6)	25			
		V_{CE} = 4 V	I_C = 15 A		10			
		V_{CE} = 4 V	I_C = 25 A		5			

TYPICAL CHARACTERISTICS

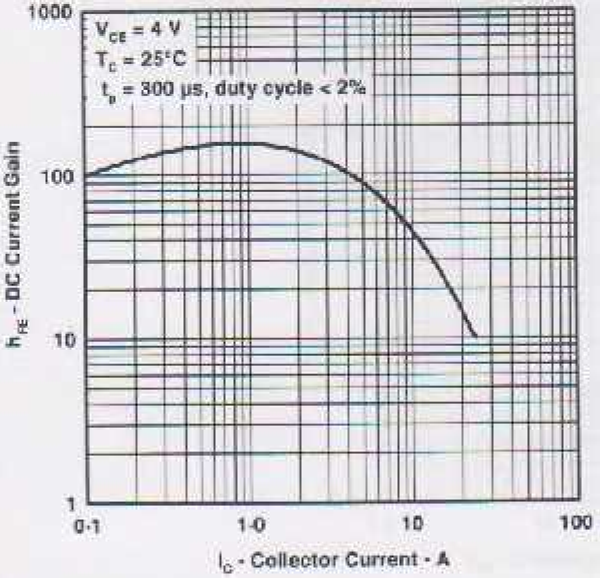
TYPICAL DC CURRENT GAIN
vs
COLLECTOR CURRENT

Figure 1.

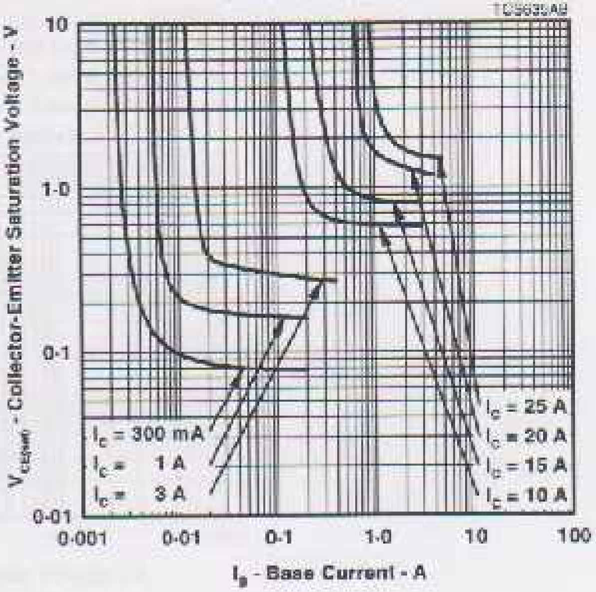
COLLECTOR-EMITTER SATURATION VOLTAGE
vs
BASE CURRENT

Figure 2.

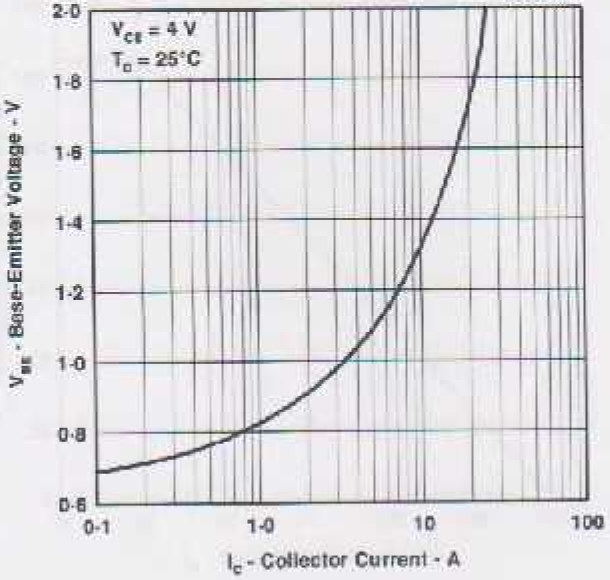
BASE-EMITTER VOLTAGE
vs
COLLECTOR CURRENT

Figure 3.

MAXIMUM SAFE OPERATING REGIONS

MAXIMUM FORWARD-BIAS SAFE OPERATING AREA

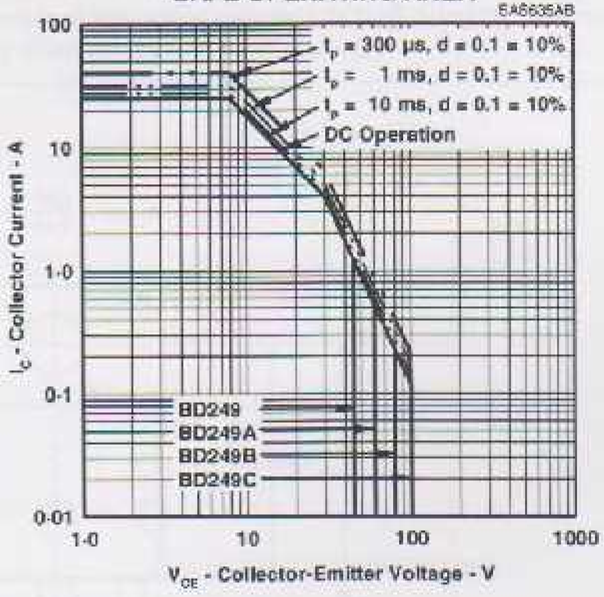

Figure 4.

THERMAL INFORMATION

MAXIMUM POWER DISSIPATION vs CASE TEMPERATURE

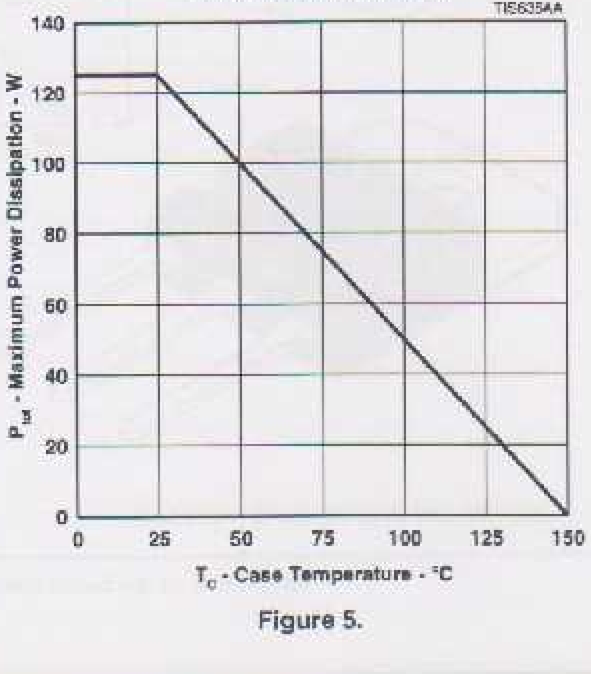

Figure 5.

MECHANICAL DATA

SOT-93

3-pin plastic flange-mount package

This single-in-line package consists of a circuit mounted on a lead frame and encapsulated within a plastic compound. The compound will withstand soldering temperature with no deformation, and circuit performance characteristics will remain stable when operated in high humidity conditions. Leads require no additional cleaning or processing when used in soldered assembly.

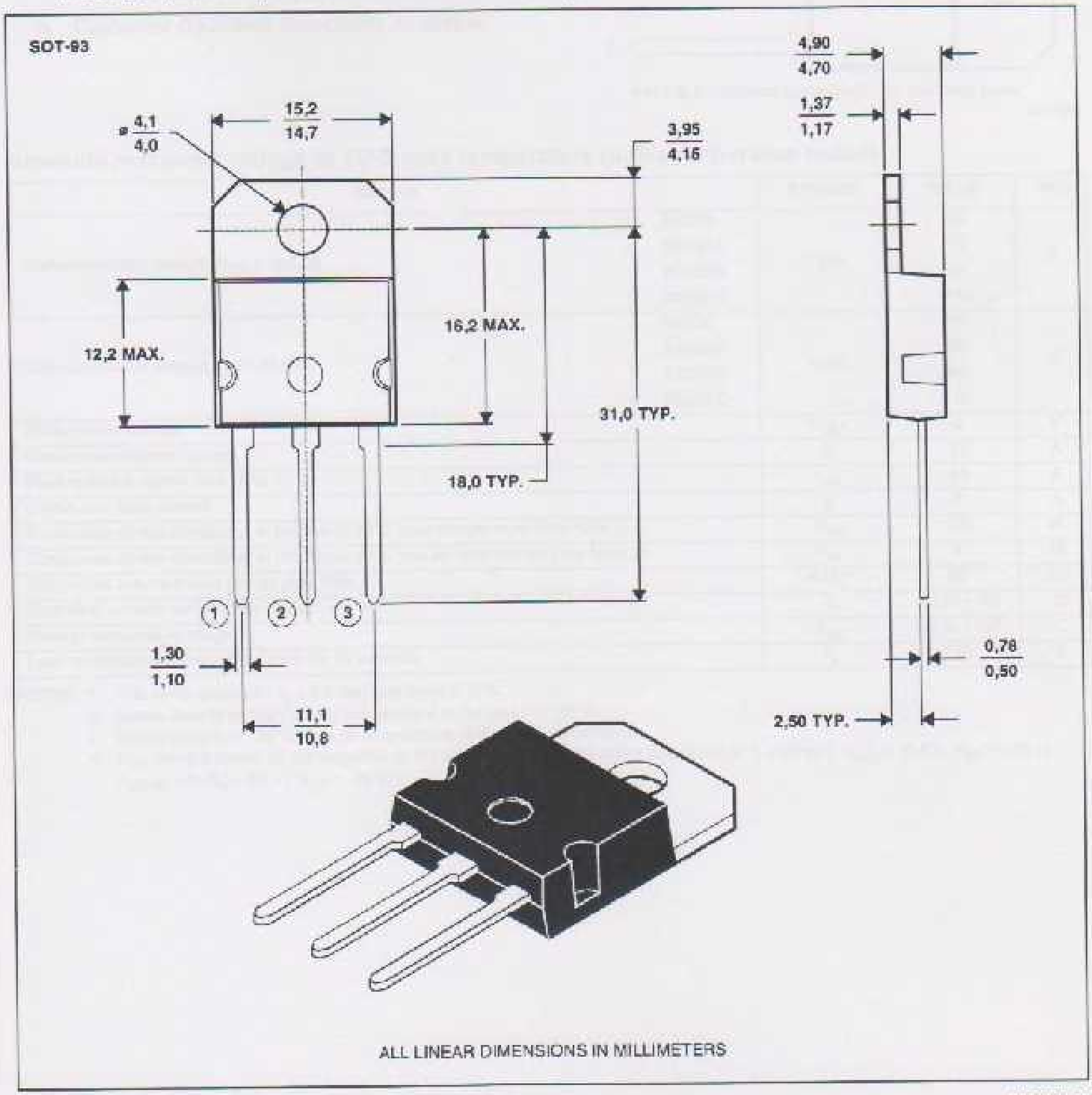

ALL LINEAR DIMENSIONS IN MILLIMETERS

NOTE A: The centre pin is in electrical contact with the mounting tab.

MDXXAW

BD250, BD250A, BD250B, BD250C
PNP SILICON POWER TRANSISTORS

JUNE 1973 - REVISED MARCH 1997

- **Designed for Complementary Use with the BD249 Series**
- **125 W at 25°C Case Temperature**
- **25 A Continuous Collector Current**
- **40 A Peak Collector Current**
- **Customer-Specified Selections Available**

SOT-93 PACKAGE
(TOP VIEW)

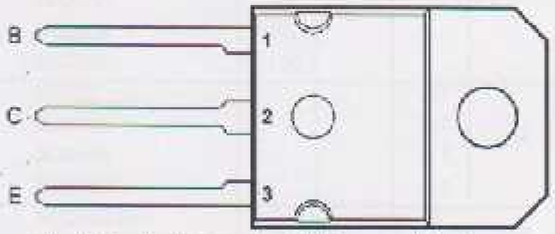

Pin 2 is in electrical contact with the mounting base.

absolute maximum ratings at 25°C case temperature (unless otherwise noted)

RATING		SYMBOL	VALUE	UNIT
Collector-emitter voltage (R_{BE} = 100 Ω)	BD250 BD250A BD250B BD250C	V_{CER}	-55 -70 -90 -115	V
Collector-emitter voltage (I_C = -30 mA)	BD250 BD250A BD250B BD250C	V_{CEO}	-45 -60 -80 -100	V
Emitter-base voltage		V_{EBO}	-5	V
Continuous collector current		I_C	-25	A
Peak collector current (see Note 1)		I_{CM}	-40	A
Continuous base current		I_B	-5	A
Continuous device dissipation at (or below) 25°C case temperature (see Note 2)		P_{tot}	125	W
Continuous device dissipation at (or below) 25°C free air temperature (see Note 3)		P_{tot}	3	W
Unclamped inductive load energy (see Note 4)		$\frac{1}{2}LI_C^2$	90	mJ
Operating junction temperature range		T_j	-65 to +150	°C
Storage temperature range		T_{stg}	-65 to +150	°C
Lead temperature 3.2 mm from case for 10 seconds		T_L	250	°C

NOTES: 1. This value applies for $t_p \le 0.3$ ms, duty cycle ≤ 10%.
2. Derate linearly to 150°C case temperature at the rate of 1 W/°C.
3. Derate linearly to 150°C free air temperature at the rate of 24 mW/°C.
4. This rating is based on the capability of the transistor to operate safely in a circuit of: L = 20 mH, $I_{B(on)}$ = -0.4 A, R_{BE} = 100 Ω, $V_{BE(off)}$ = 0, R_S = 0.1 Ω, V_{CC} = -20 V.

electrical characteristics at 25°C case temperature

PARAMETER		TEST CONDITIONS			MIN	TYP	MAX	UNIT
$V_{(BR)CEO}$	Collector-emitter breakdown voltage	I_C = -30 mA (see Note 5)	$I_B = 0$	BD250	-45			V
				BD250A	-60			
				BD250B	-80			
				BD250C	-100			
I_{CES}	Collector-emitter cut-off current	V_{CE} = -55 V	$V_{BE} = 0$	BD250			-0.7	mA
		V_{CE} = -70 V	$V_{BE} = 0$	BD250A			-0.7	
		V_{CE} = -90 V	$V_{BE} = 0$	BD250B			-0.7	
		V_{CE} = -115 V	$V_{BE} = 0$	BD250C			-0.7	
I_{CEO}	Collector cut-off current	V_{CE} = -30 V	$I_B = 0$	BD250/250A			-1	mA
		V_{CE} = -60 V	$I_B = 0$	BD250B/250C			-1	
I_{EBO}	Emitter cut-off current	V_{EB} = -5 V	$I_C = 0$				-1	mA
h_{FE}	Forward current transfer ratio	V_{CE} = -4 V	I_C = -1.5 A	(see Notes 5 and 6)	25			
		V_{CE} = -4 V	I_C = -15 A		10			
		V_{CE} = -4 V	I_C = -25 A		5			
$V_{CE(sat)}$	Collector-emitter saturation voltage	I_B = -1.5 A	I_C = -15 A	(see Notes 5 and 6)			-1.8	V
		I_B = -5 A	I_C = -25 A				-4	
V_{BE}	Base-emitter voltage	V_{CE} = -4 V	I_C = -15 A	(see Notes 5 and 6)			-2	V
		V_{CE} = -4 V	I_C = -25 A				-4	
h_{fe}	Small signal forward current transfer ratio	V_{CE} = -10 V	I_C = -1 A	f = 1 kHz	25			
$\|h_{fe}\|$	Small signal forward current transfer ratio	V_{CE} = -10 V	I_C = -1 A	f = 1 MHz	3			

NOTES: 5. These parameters must be measured using pulse techniques, t_p = 300 µs, duty cycle ≤ 2%.

6. These parameters must be measured using voltage-sensing contacts, separate from the current carrying contacts.

thermal characteristics

PARAMETER		MIN	TYP	MAX	UNIT
$R_{\theta JC}$	Junction to case thermal resistance			1	°C/W
$R_{\theta JA}$	Junction to free air thermal resistance			42	°C/W

resistive-load-switching characteristics at 25°C case temperature

PARAMETER		TEST CONDITIONS †			MIN	TYP	MAX	UNIT
t_{on}	Turn-on time	I_C = -5 A	$I_{B(on)}$ = -0.5 A	$I_{B(off)}$ = 0.5 A		0.2		µs
t_{off}	Turn-off time	$V_{BE(off)}$ = 5 V	R_L = 5 Ω	t_p = 20 µs, dc ≤ 2%		0.4		µs

† Voltage and current values shown are nominal; exact values vary slightly with transistor parameters.

TYPICAL CHARACTERISTICS

TYPICAL DC CURRENT GAIN
vs
COLLECTOR CURRENT

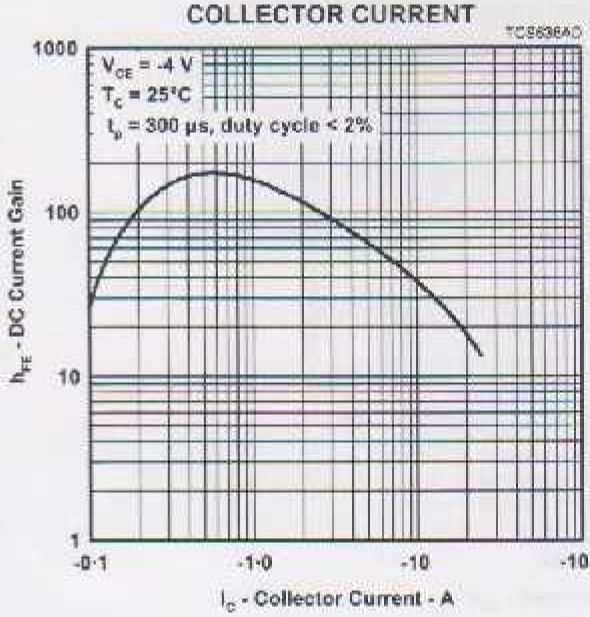

Figure 1.

COLLECTOR-EMITTER SATURATION VOLTAGE
vs
BASE CURRENT

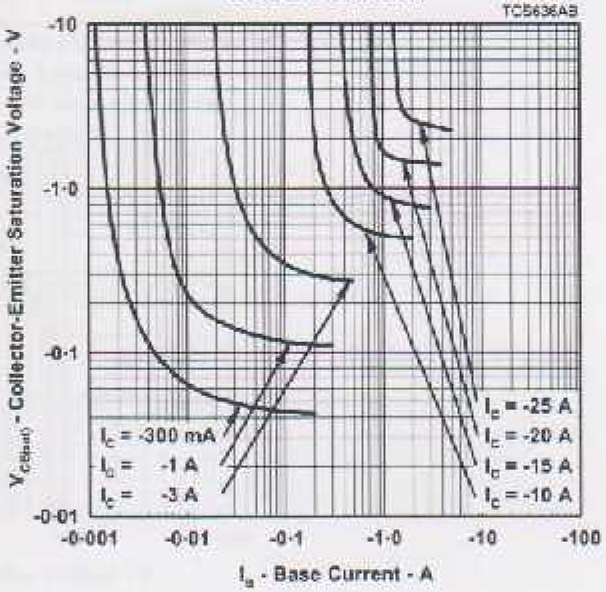

Figure 2.

MAXIMUM SAFE OPERATING REGIONS

MAXIMUM FORWARD-BIAS SAFE OPERATING AREA

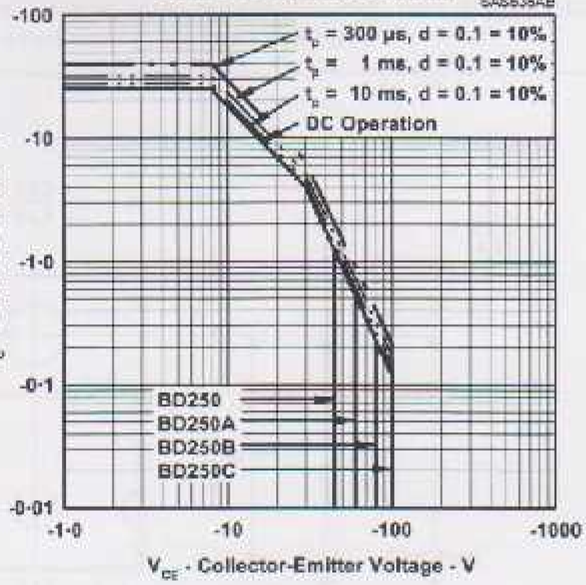

Figure 4.

THERMAL INFORMATION

MAXIMUM POWER DISSIPATION vs CASE TEMPERATURE

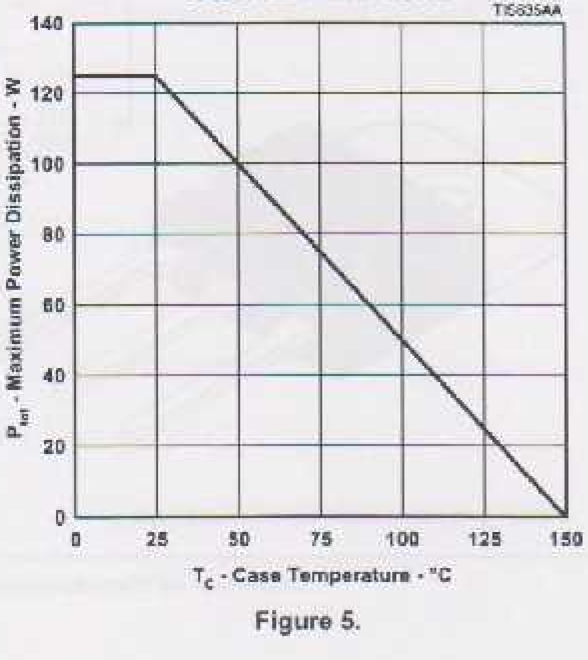

Figure 5.

MECHANICAL DATA

SOT-93

3-pin plastic flange-mount package

This single-in-line package consists of a circuit mounted on a lead frame and encapsulated within a plastic compound. The compound will withstand soldering temperature with no deformation, and circuit performance characteristics will remain stable when operated in high humidity conditions. Leads require no additional cleaning or processing when used in soldered assembly.

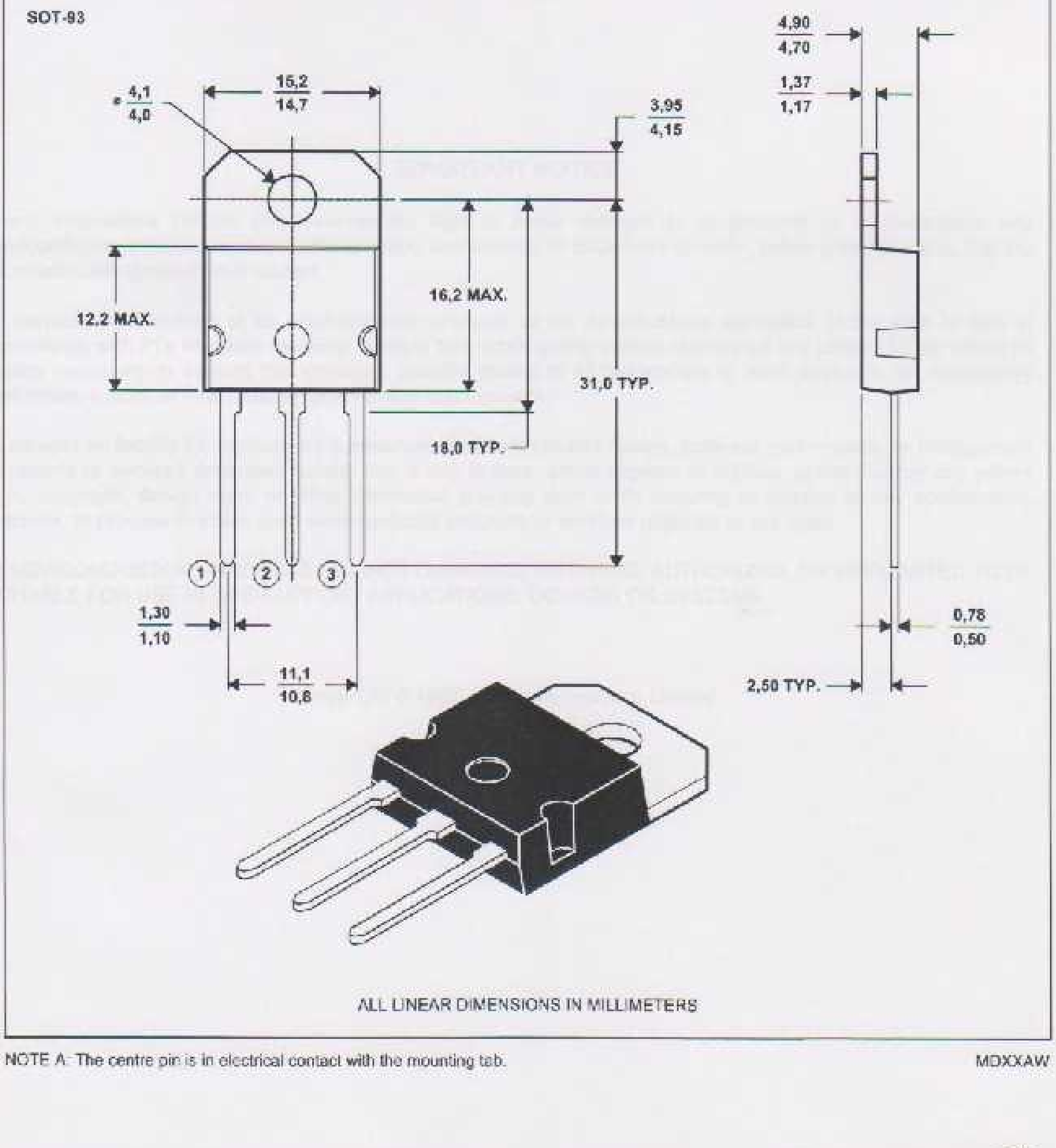

ALL LINEAR DIMENSIONS IN MILLIMETERS

NOTE A: The centre pin is in electrical contact with the mounting tab.

MDXXAW

IMPORTANT NOTICE

Power Innovations Limited (PI) reserves the right to make changes to its products or to discontinue any semiconductor product or service without notice, and advises its customers to verify, before placing orders, that the information being relied on is current.

PI warrants performance of its semiconductor products to the specifications applicable at the time of sale in accordance with PI's standard warranty. Testing and other quality control techniques are utilized to the extent PI deems necessary to support this warranty. Specific testing of all parameters of each device is not necessarily performed, except as mandated by government requirements.

PI accepts no liability for applications assistance, customer product design, software performance, or infringement of patents or services described herein. Nor is any license, either express or implied, granted under any patent right, copyright, design right, or other intellectual property right of PI covering or relating to any combination, machine, or process in which such semiconductor products or services might be or are used.

PI SEMICONDUCTOR PRODUCTS ARE NOT DESIGNED, INTENDED, AUTHORIZED, OR WARRANTED TO BE SUITABLE FOR USE IN LIFE-SUPPORT APPLICATIONS, DEVICES OR SYSTEMS.

Copyright © 1997, Power Innovations Limited