The objective of the **DCMOCS** is to develop our theoretical skills throughout our project in the practical aspects of this idea, so the main aim is to create a complete system which is able to cover a large predetermined area by controlling the object's position. In addition, the second objective is to control and increase the relative stability of the movement of the mass in the space.

Application of this project includes discovering the space as in the movement of a spider cam robot, and other applications used to discover the position.

1.2 Literature review

The control mass position of this project is always an interesting and challenging field of study, thus there are many researches and paper that take the position control as the core of their studies using a wide variety of designs, and control techniques.

Thomas Johansson, December 9, 2005

Full dynamical model of the crane structure (apart from the DC motors which controls the cables) was developed.

In that project, a flatness based control scheme for positioning the load (given a reference trajectory) was also developed. The controller was designed under the assumption that the DC motors could deliver a perfect torque. No particular care was taken in order to accurately model the DC motor.

In this project the control of the crane and the control of the DC motors will be separated, as seen at Fig (1.1).

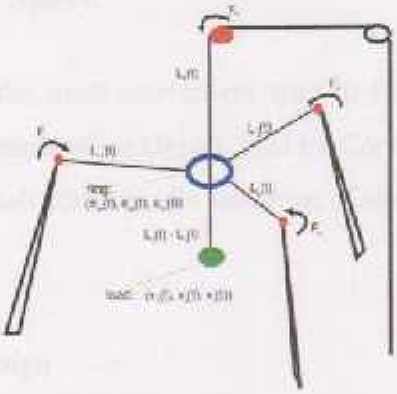

Fig (1.1) Spider Crane

1.3 Aims of the project

Many objectives could be achieved throughout this project; the working team develops their theoretical skills in the practical aspects of this idea starting from molding and ending at computer control. So the main aim is to create a complete system which is able to cover a large predetermined area by controlling an object's position.

It is possible to put a new product that uses applications in several areas including:

- The field of tourism (chairlifts three-dimensional).
- Agricultural field (automatic spray pesticides on crops in large area).
- Field imaging (Flash photography in stadiums).

1. Controller.
2. Simulation process.

After the mathematical model is derived, the controller law can be found, the detailed mathematical model and its derivation procedure will be discussed in chapter two of this report.

1.4.3 Control Design

Based on the mathematical model a closed loop control system will be designed, the controller must be able to control of the position and velocity, as required by the user.

The controller should be able to reject, or to compensate for the unknown disturbances acting on the system.

1.4.4 The Actuators

Based on the dynamics of the system and the proposed closed loop control method, the selection criteria of the motors, are based on their inertia, power, speed and torque requirement to specify the dynamics of the DC motors.

1.5 Designing and Controlling the Movement of an Object Tied via cables at Space elementary components

1.5.1Methodology

The project will be a mechatronics system, which is integration between multidisciplinary sciences; it can represent by Fig (1.3), which show the synergistic integration of three engineering fields. This integration within a mechatronics system can be performed through the combination of hardware (components) and software (information processing).

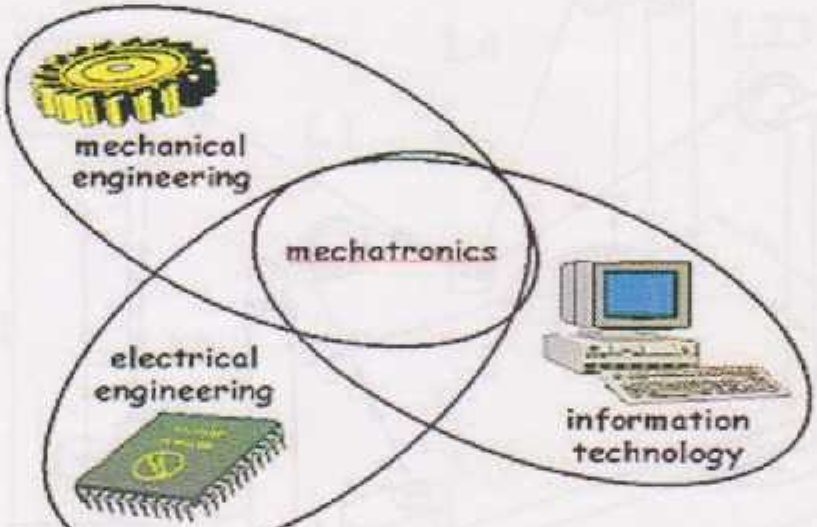

Fig (1.3) Mechatronics basic disciplines

1.6 The Schedule Time

Table(1.1) the schedule time

Tasks / # of weeks	Simulation & testing	Building the apparatus	Mechanical design	Electrical design	Control design & programming	Mathematical model	proposal	Collection data	Selection the idea of project
1									🟨
2								🟩	🟨
3								🟩	
4							🟦		
5						🟥			
6						🟥			
7	🟫					🟥			
8	🟫					🟥			
9	🟫		🟧		🟪	🟥			
10	🟫		🟧		🟪	🟥			
11	🟫		🟧		🟪	🟥			
12	🟫		🟧		🟪	🟥			
13	🟫		🟧		🟪				
14	🟫		🟧		🟪				
15	🟫		🟧		🟪				
16	🟫		🟧	🟨	🟪				
17	🟫		🟧	🟨	🟪				
18	🟫		🟧	🟨	🟪				
19	🟫		🟧	🟨					
20	🟫		🟧	🟨					
21	🟫		🟧	🟨					
22	🟫	🟦	🟧						
23	🟫	🟦	🟧						
24	🟫	🟦							
25	🟫	🟦							
26	🟫	🟦							
27	🟫	🟦							
28	🟫	🟦							
29	🟫	🟦							
30	🟫								
31	🟫								
32									

Chapter TWO

Mathematical Modeling

Table (2.1) variables of system

Symbol	Description	Unit
L_1	The length of cable 1 from origin to object	m
L_2	The length of cable 2 from origin to object	m
L_3	The length of cable 3 from origin to object	m
L_4	The length of cable 4 from origin to object	m
L_{23}	The total length of cable 2 & 3	m
X	position of the object in x direction	m
Y	position of the object in y direction	m
Z	position of the object in z direction	m
t	Time	Sec
$\hat{n}f$	The unit vector of the force	m
$\overrightarrow{F1}$	force on cable number one	N
$\overrightarrow{F2}$	force on cable number two	N
$\overrightarrow{F2}$	force on cable number three	N
$\overrightarrow{F3}$	force on cable number four	N
$[A]$	Matrix which describe the differential equation of the system(nxn)	
$[Q]$	Acceleration matrix(3x1)	
$[F]$	Forces matrix	
$[A']$	Matrix Inverse which describe the differential equation of the system(nxn)	

2.2.3.2The Forces Analysis in 3D

Introducing (2.10),(2.11) and (2.13) in (2.16) to get the equations of motions

$$\sum f = m\ddot{x} + m\ddot{y} + m\ddot{z} \tag{2.16}$$

$$\frac{-XF_1}{L_1} + \frac{(bL_2 - L_{23})F_2}{L_2\,L_3} + \frac{-XF_1}{L_4} = m\ddot{x} \qquad \textbf{in x direction} \tag{2.17}$$

$$\frac{-yF_1}{L_1} + \frac{[(a-y)L_{23}]F_2}{L_2\,L_3} + \frac{-yF_3}{L_4} = m\ddot{y} \qquad \textbf{in y direction} \tag{2.18}$$

$$\frac{-zF_1}{L_1} + \frac{-[zL_{23}]F_2}{L_2\,L_3} + \frac{-zF_3}{L_4} + mg = m\ddot{z} \qquad \textbf{in z direction} \tag{2.19}$$

$$[A][F] = [Q] \quad [4] \tag{2.20}$$

Equations (2.17),(2.18),(2.19) and (2.20) are combined to get

$$\begin{bmatrix} \frac{-X}{L_1} & \frac{[(b-x)L_2 - xL_3]}{L_2\,L_3} & \frac{-X}{L_4} \\ \frac{-y}{L_1} & \frac{[(a-y)(L_{23})]}{L_2\,L_3} & \frac{-y}{L_4} \\ \frac{-z}{L_1} & \frac{[-z(L_{23})]}{L_2\,L_3} & \frac{-z}{L_4} \end{bmatrix} \begin{bmatrix} F_1 \\ F_2 \\ F_3 \end{bmatrix} + mg \begin{bmatrix} 0 \\ 0 \\ 1 \end{bmatrix} = \begin{bmatrix} m\ddot{x} \\ m\ddot{y} \\ m\ddot{z} \end{bmatrix}$$

$$[F] = [A'][Q]$$

Where:

$A =$ Matrix which describe the differential equation of the system (nxn)

$Q =$ Acceleration matrix(3x1)

$F =$ Forces matrix

$A' =$ Inverse of A matrix

Mass of cables:

$$m_{cable} = \rho L_{cable} \qquad (2.24)$$

$m_1 = \rho L_1$, $m_2 = \rho L_2$, $m_3 = \rho L_4$

Where:

- m_1 =The mass of cable one, kg
- m_2 =The mass of cable two, kg
- m_3 =The mass of cable four, kg
- ρ = longitudinal density of cable, kg/m

Note: weight of the cable number three is neglected with the fixed attach to the column number three, as seen at Fig.(2.2).

- Weight of cable number one, as seen at Fig. (2.6):

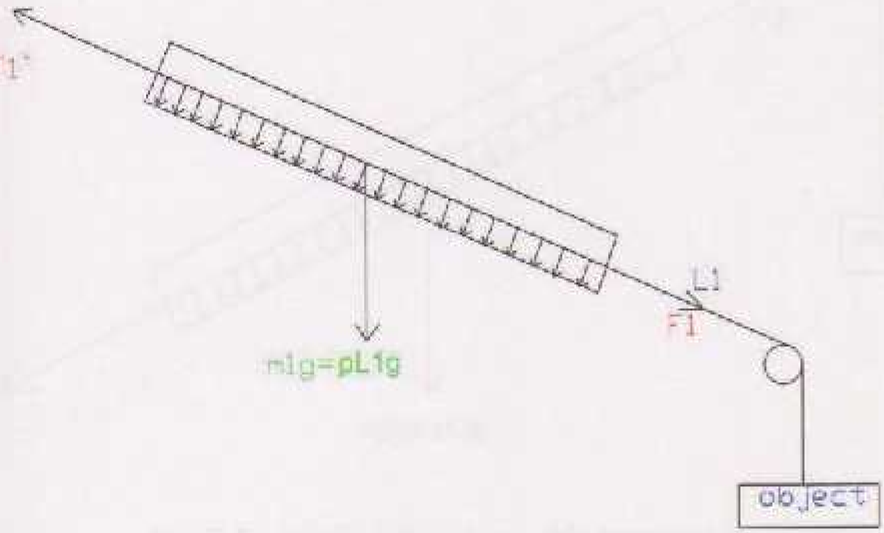

Fig.(2.6) distributed load on cable number one

$$\sum F = \mathrm{m}_1 \ddot{L_1}$$

$$F_1 - F_1' + \left(\mathrm{m}_1\, \mathrm{g}\, \hat{k} . \hat{n}_{L_1}\right) = \mathrm{m}_1\, \ddot{L_1}$$

$$F_1 - F_1' + \left(\mathrm{m}_1\, \mathrm{g}\, \hat{k}\right) \left(\frac{x\hat{\imath} + y\hat{\jmath} + z\hat{k}}{\sqrt{x^2 + y^2 + z^2}}\right) = \mathrm{m}_1\, \ddot{L_1}$$

$$F_1 - F_1' + \frac{\mathrm{m}_1\, \mathrm{g}\, \mathrm{z}}{L_1} = \mathrm{m}_1\, \ddot{L_1}$$

$$\therefore \boldsymbol{F_1'} = \boldsymbol{F_1} + \frac{\mathbf{m_1\, g\, z}}{L_1} - \mathbf{m_1}\, \ddot{L_1} \tag{2.25}$$

Where:

- $L_1 - \sqrt{x^2 + y^2 + z^2}\,)$ **(2.25.1)**
- $\dot{L_1} = \frac{(\mathrm{x}\dot{x} + \mathrm{y}\dot{y} + \mathrm{z}\dot{z})}{L_1}$ **(2.25.2)**
- $\ddot{L_1} = \frac{(\mathrm{x}\ddot{x} + \dot{x}^2 + \mathrm{y}\ddot{y} + \dot{y}^2 + \mathrm{z}\ddot{z} + \dot{z}^2) - \dot{L_1}^2}{L_1}$ **(2.25.3)**

- Weight of cable number two, as seen at Fig.(2.7)

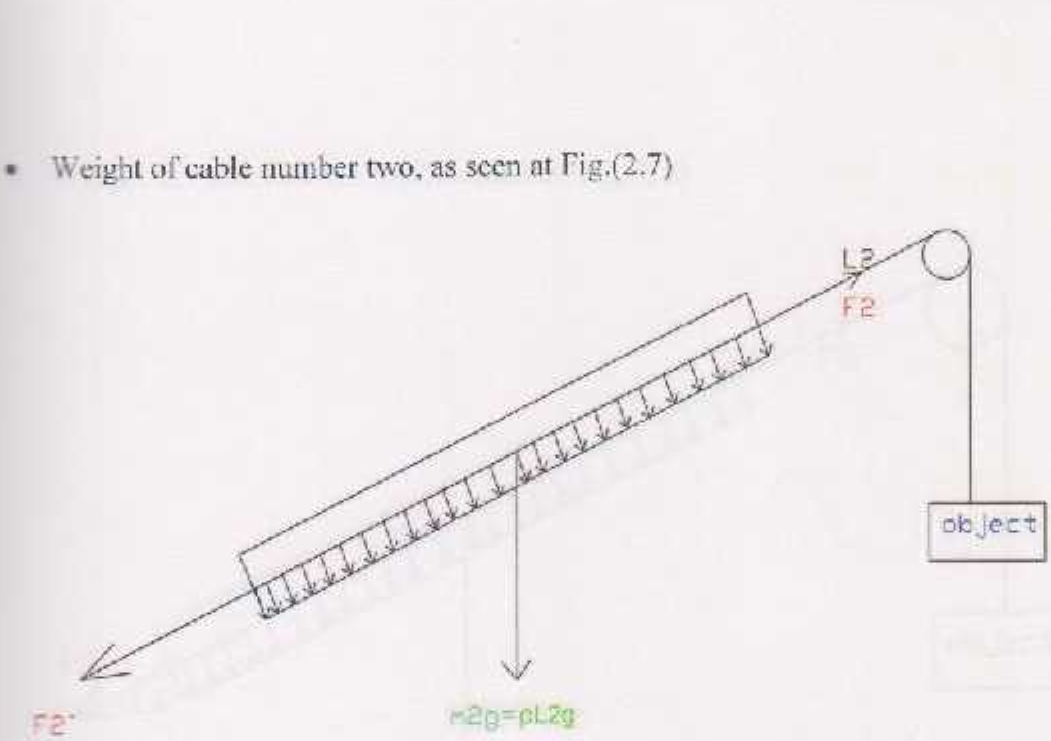

Fig.(2.7) distributed load on cable number two

$$F_2' = F_2 + \frac{m_2\, g\, z}{L_2} - m_2\, \ddot{L}_2 \qquad (2.26)$$

Where:

- $L_2 = \sqrt{x^2 + (a-y)^2 + z^2}$
- $\dot{L}_2 = \frac{(x\dot{x} + (y-a)\dot{y} + z\dot{z})}{L_2}$
- $\ddot{L}_2 = \frac{(x\ddot{x} + \dot{x}^2 + (y-a)\ddot{y} + \dot{y}^2 + z\ddot{z} + \dot{z}^2) - \dot{L}_2^{\,2}}{L_2}$

- Weight of cable number four, as seen at Fig.(2.8)

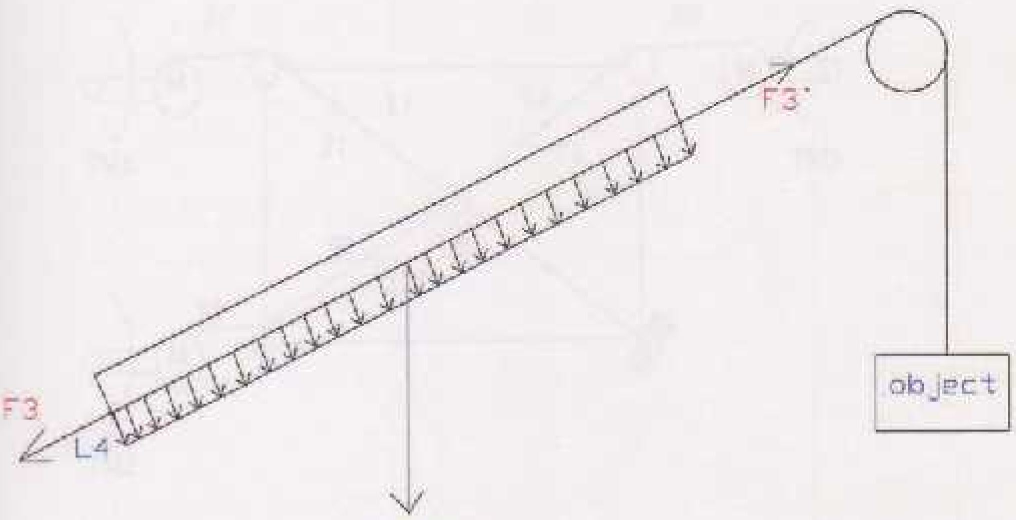

Fig.(2.8) distributed load on cable number three

$$F_3' = F_3 + \frac{m_3 g z}{L_4} - m_3 \ddot{L}_4 \qquad (2.27)$$

Where:

- $L_4 = \sqrt{(b-x)^2 + y^2 + z^2}$
- $\dot{L}_4 = \frac{(x-b)\dot{x} + y\dot{y} + z\dot{z}}{L_4}$
- $\ddot{L}_4 = \frac{\left((x-b)\ddot{x} + \dot{x}^2 + y\ddot{y} + \dot{y}^2 + z\ddot{z} + \dot{z}^2\right) - \dot{L}_4^{\,2}}{L_4}$

2.3 Torque equation analysis

Torque equation is calculate as a function of time for each three motor in the system to know how the mechanical torque and electrical torque is required to drive of each three motors.

2.3.1Analysis of torque on each cable

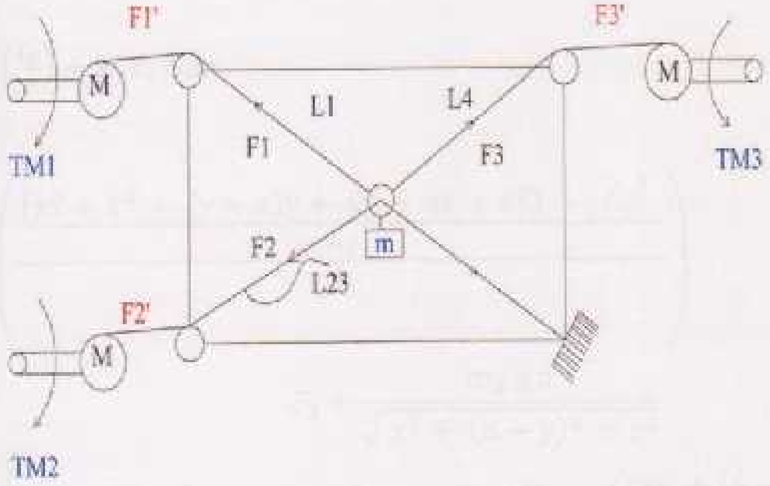

Figure (2.9)Torque of system

- The driven torque for motor one:

Introducing (2.25) and (2.25.3) in (2.28) to get the equations of driven torque for motor one

$$Tm_1 = J_0\left(\frac{\ddot{L}_1}{r}\right) + F_1' r,\ \mathrm{N.m} \tag{2.28}$$

$$Tm_1 = J_0\left\{\frac{\left(\frac{(x\ddot{x} + \dot{x}^2 + y\ddot{y} + \dot{y}^2 + z\ddot{z} + \dot{z}^2) - \dot{L}_1^{\,2}}{L_1}\right)}{r}\right\}$$

$$+r\left\{\begin{matrix} F_1 + \left(\frac{m_1\, g\, z}{\sqrt{x^2 + y^2 + z^2}}\right) \\ -\, m_1\left[\frac{(x\ddot{x} + \dot{x}^2 + y\ddot{y} + \dot{y}^2 + z\ddot{z} + \dot{z}^2) - \left(\frac{(x\dot{x} + y\dot{y} + z\dot{z})}{\sqrt{x^2 + y^2 + z^2}}\right)^2}{\sqrt{x^2 + y^2 + z^2}}\right]\end{matrix}\right\}$$

- The driven torque for motor two:

$$Tm_2 = J_0\left(\frac{\ddot{L}_2}{r}\right) + F'_2 r\text{, N.m} \tag{2.29}$$

$$Tm_2 = J_0\left(\frac{\frac{(x\ddot{x} + \dot{x}^2 + (y-a)\ddot{y} + \dot{y}^2 + z\ddot{z} + \dot{z}^2) - \dot{L}_2^{\,2}}{L_2}}{r}\right) + r\left\{\begin{array}{c} F'_2 + \dfrac{m_2\, g\, z}{\sqrt{x^2 + (a-y)^2 + z^2}} \\ -\, m_2\left[\dfrac{(x\ddot{x} + \dot{x}^2 + (y-a)\ddot{y} + \dot{y}^2 + z\ddot{z} + \dot{z}^2) - \left(\dfrac{(x\dot{x} + (y-a)\dot{y} + z\dot{z})}{\sqrt{x^2 + (a-y)^2 + z^2}}\right)^2}{\sqrt{x^2 + (a-y)^2 + z^2}}\right] \end{array}\right\}$$

- The driven torque for motor three:

$$Tm_3 = J_0\left(\frac{\ddot{L}_4}{r}\right) + F'_3 r\text{ , N.m} \tag{2.30}$$

$$Tm_3 = J_0\left(\frac{\frac{((x-b)\ddot{x} + \dot{x}^2 + y\ddot{y} + \dot{y}^2 + z\ddot{z} + \dot{z}^2) - \dot{L}_4^{\,2}}{L_4}}{r}\right) + r\left\{\begin{array}{c} F_3 + \dfrac{m_3\, g\, z}{\sqrt{(b-x)^2 + y^2 + z^2}} \\ -\, m_3\left[\dfrac{((x-b)\ddot{x} + \dot{x}^2 + y\ddot{y} + \dot{y}^2 + z\ddot{z} + \dot{z}^2) - \left(\dfrac{(x-b)\dot{x} + y\dot{y} + z\dot{z}}{\sqrt{(b-x)^2 + y^2 + z^2}}\right)^2}{\sqrt{(b-x)^2 + y^2 + z^2}}\right] \end{array}\right\}$$

2.4 Maximum torque on cables system through general Cubic Profile

Consider the problem of moving the tool from its initial position to a goal position in a certain amount of time

2.4.1 The Cubic Polynomials trajectory [2] method

In making a single smooth motion, at least four constraints on s(t) are evident. Two constraints on the function's value come from the selection of initial and final values:

$$s(0) = s_0$$
$$s(t_f) = s_f \; 0 \qquad (2.31)$$

The Cubic Polynomials trajectory method is used to generate the trajectory path of the object along the coordinate axis (x,y,z).

An additional two constraints are that the function is continuous in velocity, which in this case means the initial and final velocity is zero:

$$\dot{s}(0) = 0$$
$$\dot{s}(t_f) = 0 \qquad (2.32)$$

These four constraints can be satisfied by a polynomial of at least third degree. Since a cubic polynomial has four coefficients, it can be made to satisfy the four constraints given by (2.31)and (2.32). These constraints uniquely specify a particular cubic. A cubic has the form:

$$s(t) = \mathbf{a}_0 + \mathbf{a}_1\, t + \mathbf{a}_2 t^2 + \mathbf{a}_3 t^3 \qquad (2.33)$$

And so the joint velocity and acceleration along this path are clearly:

$$\dot{s}(t) = \mathbf{a}_1 + 2\mathbf{a}_2\, t + 3\mathbf{a}_3 t^2 \qquad (2.34)$$

$$\ddot{s}(t) = 2\mathbf{a}_2 + 6\mathbf{a}_3 t \qquad (2.35)$$

Where:

- s(t)–The position profiles of the object in cubic form ,m
- s □(t)–The velocity profiles of the object in cubic form ,m/s
- *s □(t)–The acceleration profiles of the object in cubic form ,m/s*^{2}

Combining (2.33) ,(2.34) and (2.35) with the four desired constraints yields four equations in four unknowns:

$$s_0 = a_0$$
$$s_f = a_0 + a_1 t + a_2 t^2 + a_3 t^3$$
$$0 = a_1 \tag{2.36}$$
$$0 = a_1 + 2a_2 t + 3a_3 t^2$$

Solving these equations for the a_i we obtain:

After calculation:

$$a_0 = 0,$$
$$a_1 = x_0 \ ,$$
$$a_2 = 3\left[\frac{(s_f - s_0)}{t_f^2}\right], \tag{2.37}$$
$$a_3 = 2\left[\frac{(s_0 - s_f)}{t_f^3}\right]$$

$t_f = 1 + 2D$, $V_{avg} = 0.5$ m/sec

$$D = \sqrt{(x_f - x_0)^2 + (y_f - y_0)^2 + (z_f - z_0)^2} \tag{2.38}$$

Where:

- D =Distance between previous position and desired position in the work space, m
- t_f = Is the time for the desired goal position of object, sec
- (x_0, y_0, z_0) Initial position of the object, m
- (x_f, y_f, z_f) Final desired position of the object, m

- Cubic form in the x-direction:

$$x(t) = x_0\, t + 3t^2 \left[\frac{(x_f - x_0)}{t_f^{\,2}}\right] + 2t^3 \left[\frac{(x_0 - x_f)}{t_f^{\,3}}\right] \tag{2.36}$$

$$\dot{x}(t) = 6t \left[\frac{(x_f - x_0)}{t_f^{\,2}}\right] + 6t^2 \left[\frac{(x_0 - x_f)}{t_f^{\,3}}\right] \tag{2.37}$$

$$\ddot{x}(t) = 6 \left[\frac{(x_f - x_0)}{t_f^{\,2}}\right] + 12t \left[\frac{(x_0 - x_f)}{t_f^{\,3}}\right] \tag{2.38}$$

- Cubic form in the y-direction:

$$y(t) = y_0\, t + 3t^2 \left[\frac{(y_f - y_0)}{t_f^{\,2}}\right] + 2t^3 \left[\frac{(y_0 - y_f)}{t_f^{\,3}}\right] \tag{2.39}$$

$$\dot{y}(t) = 6t \left[\frac{(y_f - y_0)}{t_f^{\,2}}\right] + 6t^2 \left[\frac{(y_0 - y_f)}{t_f^{\,3}}\right] \tag{2.40}$$

$$\ddot{y}(t) = 6 \left[\frac{(y_f - y_0)}{t_f^{\,2}}\right] + 12t \left[\frac{(y_0 - y_f)}{t_f^{\,3}}\right] \tag{2.41}$$

- Cubic form in the z-direction

$$z(t) = z_0\, t + 3t^2 \left[\frac{(z_f - z_0)}{t_f^{\,2}}\right] + 2t^3 \left[\frac{(z_0 - z_f)}{t_f^{\,3}}\right] \tag{2.42}$$

$$\dot{z}(t) = 6t \left[\frac{(z_f - z_0)}{t_f^{\,2}}\right] + 6t^2 \left[\frac{(z_0 - z_f)}{t_f^{\,3}}\right] \tag{2.43}$$

$$\ddot{z}(t) = 6 \left[\frac{(z_f - z_0)}{t_f^{\,2}}\right] + 12t \left[\frac{(z_0 - z_f)}{t_f^{\,3}}\right] \tag{2.44}$$

Where:

- $x(t)$ = Position of the object in x direction
- $y(t)$ – Position of the object in y direction
- $z(t)$ = Position of the object in z direction

- $\dot{x}(t)$ =The velocity of the object in x direction
- $\dot{y}(t)$ =The velocity of the object in y direction
- $\dot{z}(t)$ =The velocity of the object in z direction

A result was observed when we compute the torque that is required for motors to transport an object between two points in the work space .The torque was obtained as a function of time .The torque function is obtained using cubic polynomial trajectory path. The torque function of the forward motion was the same of torque function of backward motion .

This test was mad when the distance between the actual position and desired position was maximum, the maximum distance was used to calculate the torque function in order to select the motor using its required power.

$$Power_{max} = w_{max}\, T_{max} \qquad (2.51)$$

Where:

- T_{max} = Is maximum torque applied on pulley motor get from torque curve, **N.m**
- w_{max} = Is maximum speed getting from cubic polynomial profile, **rad/sec**

2.4.3 The length of all cables used in prototype:

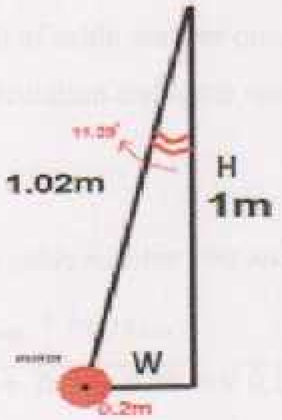

Fig.(2.14) distance from the shaft's pulley to the upper

$$h = \sqrt{H^2 + W^2} = 1.02\ m$$

$$h = \sqrt{0.2^2 + 1^2} = 1.02\ m$$

where:

- h= the distance from the shaft's pulley to the upper fixed pulleys on the frame, m.
- H = the height from the upper pulley to the shafts pulley in z direction.
- W = the distance from each motor to the column of the fame.

The equations which describe the total length of each cable used in the system.

$$L_{cable} = 3(\pi\, d_{pulley}) + h + L_{eff_{max}} \quad \textbf{(2.52)}$$

Where:

- $L_{eff_{max}}$= Maximum effective length of cable(the maximum distance which object moving), m
- d_{pulley} = Diameter of motor's pulley, m

For cable number 1 the length subs in eq. (2.52):

$L_1 = 3(\pi\, d_{pulty}) + h + L_{1eff_{max}}$

$= 3(\pi * 0.05) + 1.1 + \sqrt{1.1^2 + 0.7 + 0.9^2} - 1.491 - 1.585$

$= L_1 = 3.075\ m$, the total length of cable number one.

For cable number four same calculation and same result.

$= L_4 = 3.075\ m$

For the cable which include the cable number two and three:

$L_{23} = 3(\pi\, d_{pully}) + h + L_{2eff_{max}} + L_{3eff_{max}}$

$= 0.47 + 1.1 + \sqrt{1.1^2 + 0.7 + 0.9^2} + \sqrt{0.1^2 + 0.7 + 0.9^2}$

$= L_{23} = 4.2195\ m$, the total length of cable number (two, three).

The total length of all cables used to cover the area of work space:

$= L_{total} = L_1 + L_{23} + L_4 = 10.369\ m$

2.4.4 Pulley connected to shaft motor characteristics

Pulley's motor design

To meet the desired specifications which give the project the perfect performance and to consider the length of the cable which will be turn on the shaft's pulley, so the distance of these cable will be known from the number of cable's turns on the shaft's pulley for each motor.

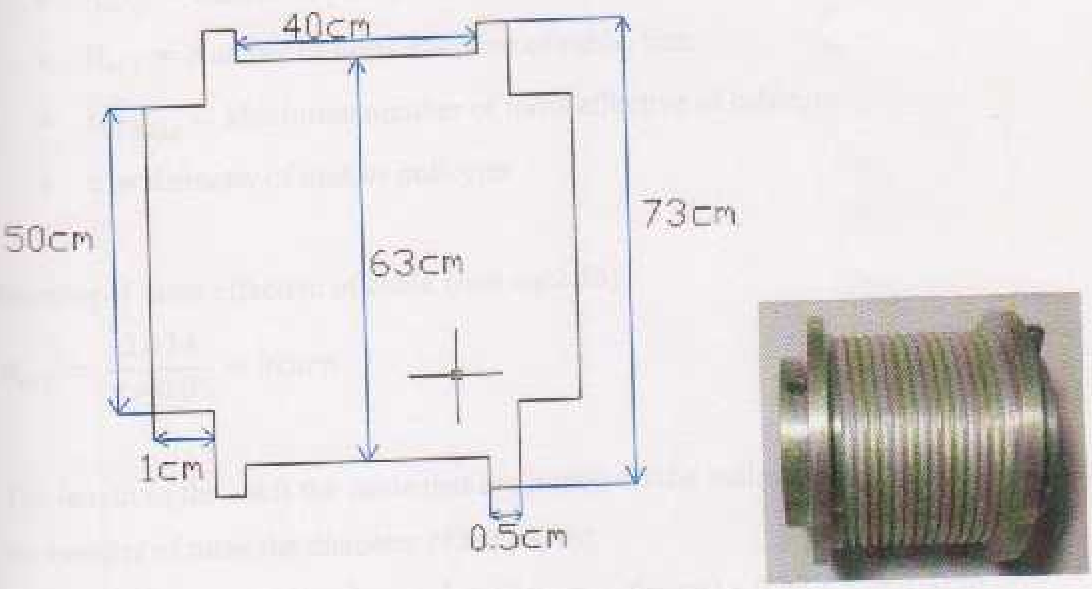

Fig.(2.15)

Let :

- $d_{pully} = 0.06m$ for all motors
- $\rho_{Al} = 2700\ kg/m^3$ (aluminum density) [3]
- H_{safty} =0.05 m .

$m_{pully} = \rho * v$

Where :

- m = mass of pulley, kg
- ρ = density of aluminum, kg/m^3
- v =The volume of aluminum, m^3

$$m_{pully} = \pi r_{pully}{}^{2} H_{total} \rho_{Al} \tag{2.53}$$

$$J_{pully} = \frac{1}{2} m_{pully} r_{pully}{}^{2} \tag{2.54}$$

$$N_{eff} = \frac{L_{eff\,max}}{\pi d} \tag{2.55}$$

Where :

- J_{pully} =Mass moment of inertia of pulley, $kg.m^2$.
- m_{pully} = Mass of pulley,kg.
- r_{pully} = Radius of pulley m,turn.
- N_{eff} = Number of turns effective of cable, turn.
- $L_{eff_{max}}$ = Maximum number of turns effective of cable,m.
- d = diameter of motors pulley,m

Number of turns effective of cable from eq(2.55):

$$N_{eff} = \frac{1.414}{\pi * 0.05} = 9turn$$

The length of the shaft the cable that are turned on the pulley can be calculated using the number of turns the diameter of the pulley:

$H_{eff} = 2[(N_{safty} + N_{eff}) r_{cable}] = (3turn + 9turn) * 0.03 * 2 = 7.2cm$

$\therefore H_{eff} = 7.2cm$

Then the all height of pulley

$H_{total} = H_{eff} + H_{safty} = 7.2 + 0.5 * 2 = 8.2m$

J_{pully}–Mass moment of inertia for the pulley, $kg.m^2$.

$m_{pully} = 0.585\ kg$

Sub in eq (2.53) to find Mass moment of inertia of pulley

$$J_{pully} = \frac{1}{2} m_{pully} r_{pully}{}^{2} \tag{2.56}$$

$J_{pully} = \frac{1}{2} * 0.585 * 0.03^2 = 0.00026325\ kg.m^2.$

Chapter Three

Mechanical and Electrical Design for Prototype

3.1 The mechanical components:

Design is an iterative process with many interactive phases. Many resources exist to support the designer, including many sources of information and an abundance of computational design tools [7].

The mechanical design of any mechanical machine means the description of physical parts of the system; know any how much the forces acting on each part of the system in addition to knowing the pressure and tension caused by these forces, it is also necessary to know the geometry of each part of the machine is mechanical.

CATIA V5 program and AutoCAD2007 is used for designing and simulation of the mechanical structure for the system, as seen at Fig (3.1) and Fig (3.2).

Fig (3.1) CATIA V5 window

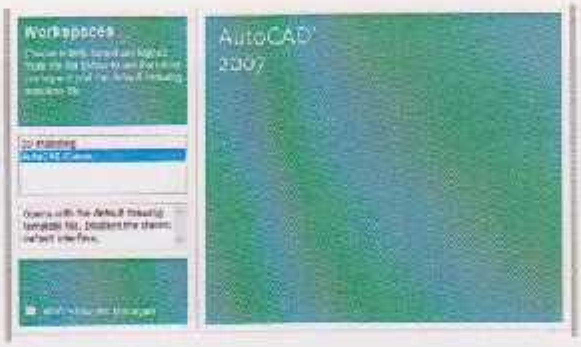

Fig (3.2) AutoCAD2007 window

The system has to be designed for different mechanical components. will be shown and discussed according to their functions.

The dimensions of frame, as seen at Fig (3.3) is :

a) x-axis 120cm
b) y-axis 80cm
c) z-axis 100cm

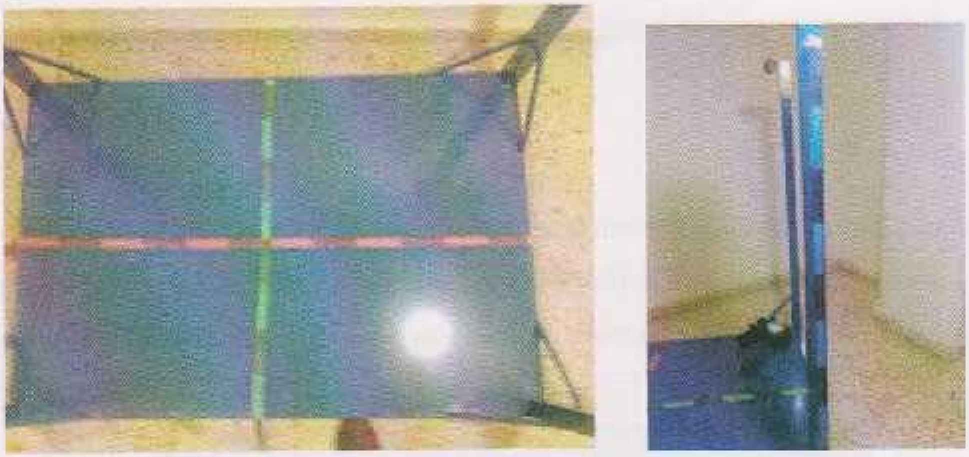

Fig (3.3) geometer of DCMOCS

3.1.1 Frame

The material of frame is cast iron with 4*4 cm with plate of 4 mm cast iron, the prototype has 4 wheel , as seen at Fig (3.4).


Fig (3.9) Cable pulley


Fig (3.10) motion of pulley cable

3. Mass pulley

The choice of pulley is limitation with dimension of system, that would to find a small pulley with small bearing, that can carry mass inside the whole space of prototype.


Fig (3.11) pulley mass

This pulley has one rotational degree of freedom in zy-plane. , as seen at Fig (3.12).

Fig (3.12) pulley mass motion

3.1.5 Bolts

Blots in mechanical system is way to connect two part or more. in prototype use bolts, nuts and washer, as seen at Fig (3.13.a), with difference dimensions for :

- Fixed motor with frame of prototype, as seen at Fig (3.13.b)
- Fixed pulleys cable with frame of prototype, as seen at Fig (3.13.c)

Fig (3.13.a) Bolts, Nuts and Washer

3.2 Electrical Design

3.2.1 Introduction

This chapter will discuss the process of designing the needed electrical parts to operate the system; these parts include the actuators which are electrical motors, the drive circuits ,and the controller.

The block diagram shown in Figure (3.20) describes the elements that form the entire system generally.

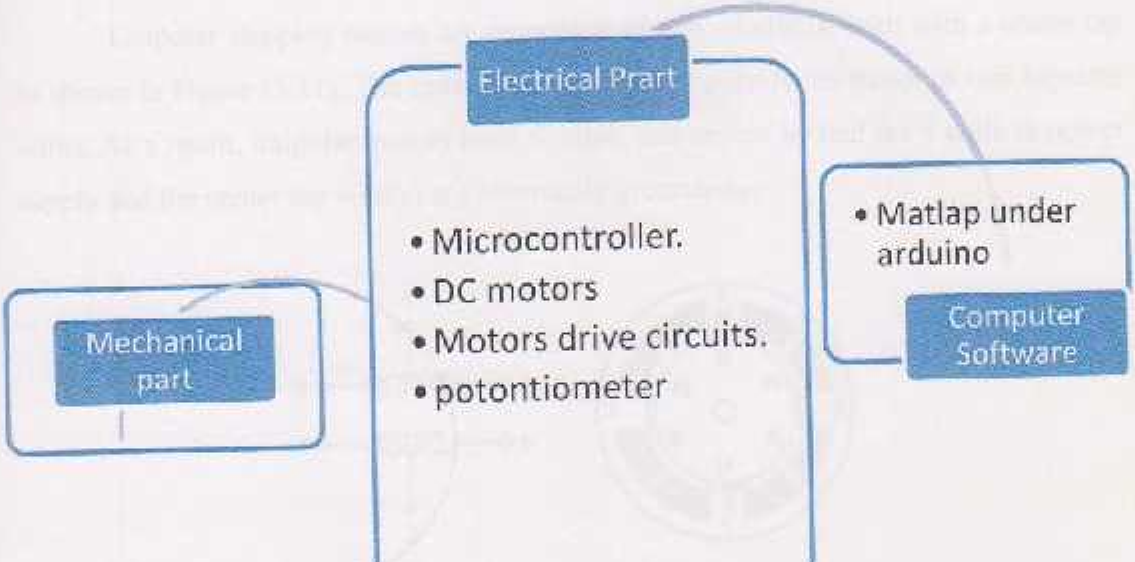

Figure (3.20) Basic Elements in the System

The electrical system includes DC of electrical motors, this motors are controlled by digital sequence generated by microcontroller and supplied to the motors throw drive circuits.

3.2.2 MOTORS

in the first we were used some kind of motors such stepper motor and dc motor .but in the end

we use the DC motors depend on the characteristics of the motors and which is more suitable for control .so The system includes three DC motor to provide the needed motion.

3.2.2.1 Stepper motor

Unipolar stepping motors are composed of two windings, each with a center tap as shown in Figure (3.21). The center taps are brought outside the motor as two separate wires. As a result, unipolar motors have 6 wires, and driven by tied the 4 coils to power supply and the center tap wire(s) are alternately grounded[9].

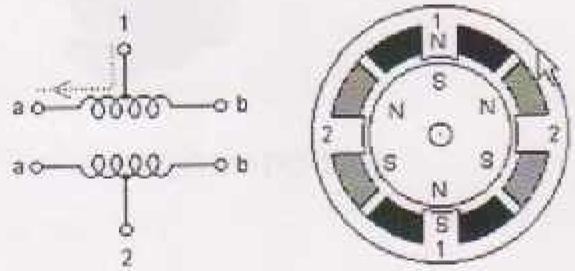

Figure (3.21) Unipolar stepper motor windings

3.2.2.2 Dc motors

A DC motor is a mechanically commutated electric motor powered from direct current (DC). The stator is stationary in space by definition and therefore the current in the rotor is switched by the commentator to also be stationary in space. This is how the relative angle between the stator and rotor magnetic flux is maintained near 90 degrees, which generates the maximum torque.

DC motors have a rotating armature winding (winding in which a voltage is induced) but non-rotating armature magnetic field and a static field winding (winding that produce the main magnetic flux) or permanent magnet. Different connections of the field and armature winding provide different inherent speed/torque regulation characteristics. The speed of a DC motor can be controlled by changing the voltage applied to the armature or by changing the field current. The introduction of variable resistance in the armature circuit or field circuit allowed speed control. Modern DC motors are often controlled by power electronics systems called DC drives as seen at Fig (3.22)[10].

Fig(3.22) DC drives

3.2.3 Sensor

Linear Potentiometer linear potentiometers is sufficient.
A potentiometer as seen at Fig (3.23), is a three-terminal resistor with a sliding contact that forms an adjustable voltage divider.

Fig (3.23) potentiometers

Potentiometers are also very widely used as a part of displacement transducers because of the simplicity of construction and because they can give a large output signal [11].

A potentiometer measuring instrument is essentially a voltage divider used for measuring electric potential (voltage).

Potentiometers can be used as position feedback devices in order to create "closed loop" control, such as in a servomechanism. This method of motion control used in the DC Motor is the simplest method of measuring the distance or speed.

- Using linear potentiometer instead of encoder
- Noted a potentiometer will give an absolute position within a limited range of motion regardless of its starting location. And it is also inexpensive and practical In contrast to the encoder.

3.2.4 MOTORS DRIVE CIRCUIT

The drive circuit is transfer the digital signal produced by the Microcontroller and supplies the motor with the required power as it donated in the motors datasheets ,as show Fig (3.24).

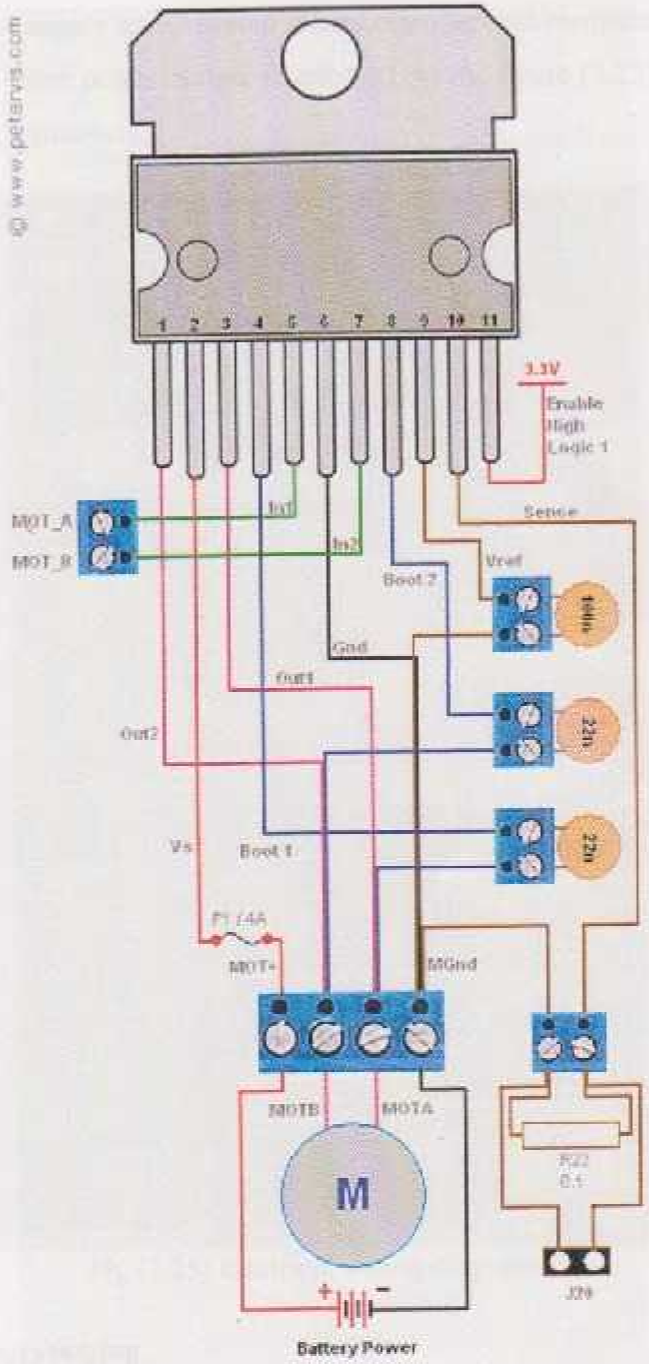

Fig (3.24) The Electrical wiring diagram of the system

A control system consist of subsystems and processes (or plants) assembled for the purpose of controlling the outputs of the process. There are two common classes of control systems, open loop control systems and closed loop control systems. In open loop control systems output is generated based on inputs. In closed loop control systems current output is taken into consideration and corrections are made based on feedback, so control system can automatically changes the output based on the difference between the feedback signals to the input signal.

4.2 Recognition of the Need

This project aims to design and implement a prototype of a control system to control a position of an object to transport it from a specified position to another specified position in three-dimensional space. The strategy that is used to control the position of an object uses three cables, these cables are hold with the object and each end of cable is connected to a DC motor.

This strategy needs a closed loop control system to make the required calculations to obtain the torque for each motor to get the required length of each cable. Moreover, the computer will compute the trajectory and control the cables lengths as function of time to achieve the desired target position with the planned trajectory.

The proposed controller for each degree of freedom is a PID controller to control of three independent DC motors in order to Determination the cables lengths. The current (actual) position is usually obtained from the previous command, and the desired position will be given by the user .The actual position of the object can be determined using encoders that are placed at pulleys of motors. The controller makes a comparison between the actual and desired position in order to get the true position of the object and matching the requiring design.

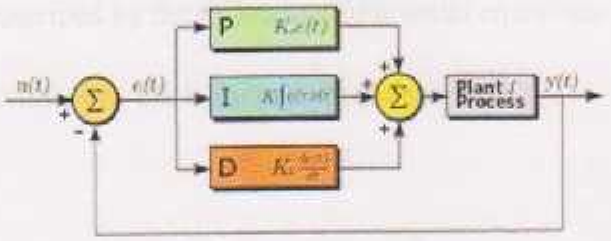

Figure (4.2) General PID Controller close loop

4.3 DC motor

4.3.1 Theoretical model

The model that describes the system does not take the dynamics of the DC motors into account. A way to improve the control of the hole system is to take these dynamics into account. The model of the DC motor, which is identified, consists of a DC motor gear box with a pulley connected to the shaft.

This is due to the fact that one would like to control the length and velocity of the cables, which is the same as the position and velocity of a point on the Suspended object. By the way, it is desirable to have a simple model that describes the DC .

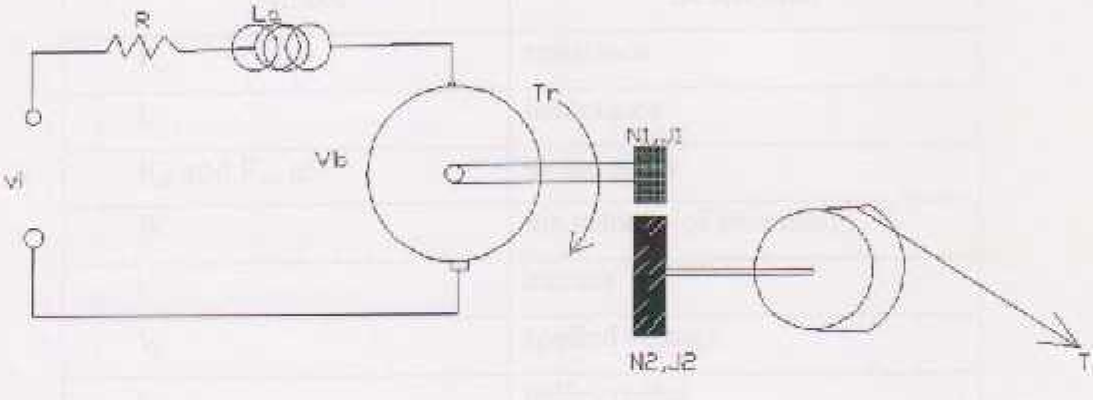

Figure (4.3): A simple model of a DC motor.

- This system is described by the following differential equations :

From fig(4.3) and Ohm's law the input current to te motor

$$\mathbf{i} = \frac{V_i - V_b}{R_a} \tag{4.1}$$

The input voltage of motor is:

$$\mathbf{V_b = K_b * W} \tag{4.2}$$

The input voltage of motor in frequancy domain is:

$$\mathbf{V_b(s) = K_b * s * \Theta_m} \tag{4.3}$$

The electrical torque of motor in frequancy domain is:

$$\mathbf{Tm_{elec} = K_m * i(s) = K_m * \frac{(V_i - K_b\, S\, \Theta)}{R_a}} \tag{4.4}$$

The mechanical torque of motor in frequancy domain is:

$$\mathbf{Tm_{mech} = J_{eq}\, \ddot{\Theta}_m + C_{eq}\, \dot{\Theta}_m + T\, r}$$

$$\mathbf{K_m * \frac{(V_i - K_b\, s\, \Theta)}{Ra} = s^2\ J_{eq}\ \Theta_m + C_{eq}\, s\, \Theta_m} \tag{4.5}$$

Tabel (4.1) Dc motor pameters

Symbol	Description
R_a	resistance
L	inductance
K_b and K_m are	motor gains
W	the velocity of the pulley
i	current
V_i	applied voltage
r	pulley radius
Tm_{mech}	mechanical torque
Tm_{elec}	Electrical torque
θ	angular position of the motor

The differential equations above correspond to a first order transfer function assuming that the electrical pole is neglected.

$$\mathbf{W(s)} = \frac{K_m}{(\tau_m * S+1)} * \mathrm{v}(s) \tag{4.6}$$

Which is the transfer function from applied voltage to velocity of the pulley cable?

Where:

- $\mathbf{K}_m$ is related to the dc-gain,
- τ_m is the mechanical time constant
- $v(s)$ = applied voltage

Assuming that:

The motor is strong enough, and is the mechanical time constant is very small ($\tau_m \approx 0$).

$$\mathbf{W(s) = K_m * v(s)} \tag{4.7}$$

$$\theta(s) = \frac{K_m}{s} * v(s) \tag{4.8}$$

Where:

- $\mathbf{K}_m$ is related to the dc-gain
- $v(s)$ = applied voltage
- $W(s)$= velocity of the motor
- $\theta(s)$=angular position of the motor

4.3.2 Experiment and Estimation

The inertial load on the DC motors will change when the load is moved. This is due to the fact that the forces in the cables are dependent on the position of the load. The two extreme cases for the inertial load on the DC motor are:

- Weight of load is not connected to the DC motor
- The whole weight of the load is connected to one DC motor.

4.3.2.1 Estimation Results

$$W(s)= Km*v(s) \tag{4.9}$$

$$\theta(s) = km/S \ * v(s) \tag{4.10}$$

It is desirable to have a simple model that describes the DC motor. The estimated first order transfer function model is

$$G(s) = \frac{\beta}{s+\alpha} \tag{4.11}$$

System Identification method is used to estimate the coefficients (α , β) of the first order model by Appling open loop velocity feedback :

$$\alpha=4/T_s \tag{4.12}$$

$$\beta= V_f \times \alpha \tag{4.13}$$

Where:

- T_s = the settling time ,ms
- β– related to the dc-gain
- V_f– final value ,mv

4.4 control simulation

The objective is to track a position reference for the cable, which is the same as the position of the motor.

By control the length of three cables, to control position of the suspended object to the cables which each desire length is treats as voltage input to the PID controller to make the require calculation and getting the true position and velocity needed to each motor for driving the cables.

The length of cable which treat with motor number four

$$L_4 = \sqrt{(b - x)^2 + y^2 + z^2} \tag{4.16}$$

The length of cable which treat with motor number two

$$L_2 = \sqrt{x^2 + (a - y)^2 + z^2} \tag{4.17}$$

The length of cable which treat with motor number one

$$L_1 = \sqrt{x^2 + y^2 + z^2} \tag{4.18}$$

There are three variable in the equation above (x,y,z) this value represent the desired position of the object which is obtained from the user ,after calculate the length of each cable they converted to the angular position to drive each motor's drum.

The suggested control structure is simulated in Matlab :

Where:

- A = L1/r ;%A % The angular position of the pulley at motor 1
- B = L2/r; %B % The angular position of the pulley at motor 2
- C = L4/r; %C % The angular position of the pulley at motor 3
- r = radius of drum on each motor, m

The designing PID controller by tuning on matlab to get the gains (P, I, D) which match the requirement of desired response design, as seen at Fig (4.8).

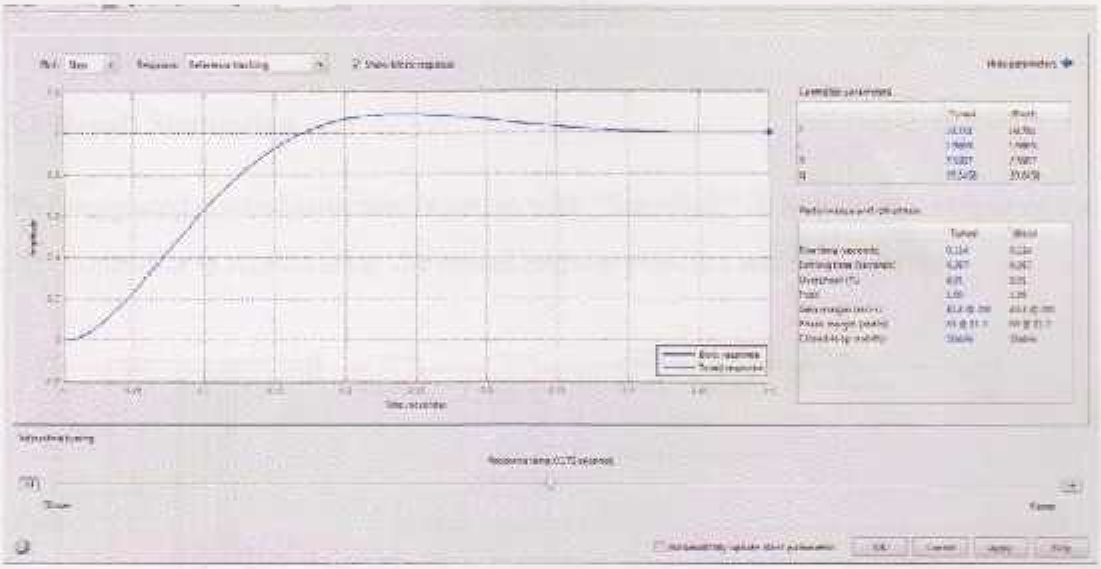

Figure (4.8) desired PID response

The first test stage is to check the response of the motor after the feedback process

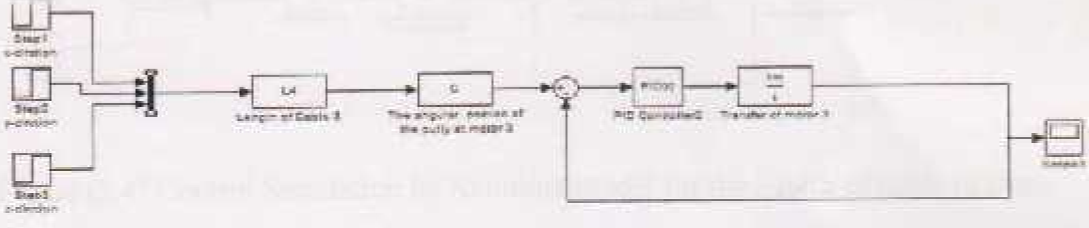

Figure (5.2) Control Simulation by Simulink model for the angular position of the motor's drum

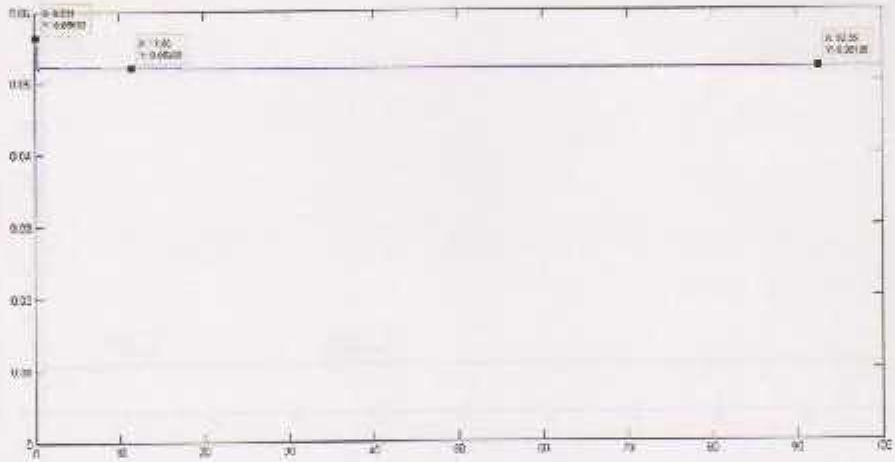

Figure (5.3)the step response of the angular position for motor's drum

The response in the figure(5.3) is match the requirement of the PID controller design and achieves the true position which user interest.

The second test stage is to check the response of length before and after the controller

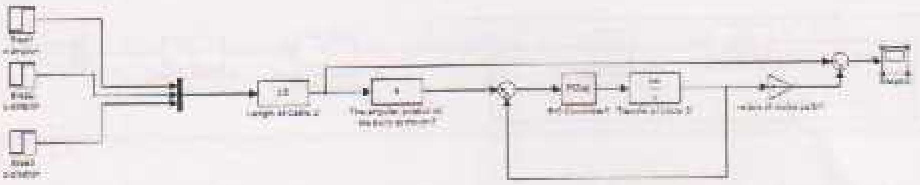

Figure (5.4) Control Simulation by Simulink model for the length of cable in close loop strategies

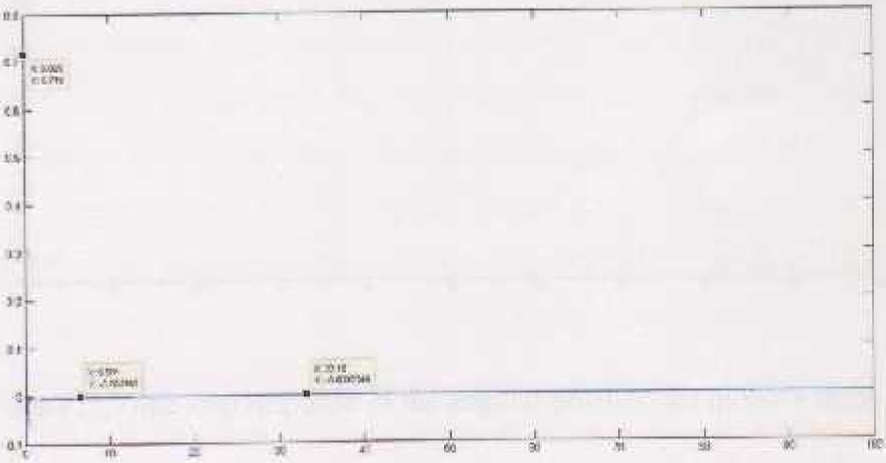

Figure (5.5) cable's length step response before and after controller

The result ensure that there is no error in actual and desired length of the cable as seen in figure (5.5) ,therefore the input position from the user by terms of (x,y,z) is the same to the actual position .

The third test stage is to check the response of the angular position of motor's drum

Figure (5.6) Control Simulation by Simulink model for the angular position of the motor's drum

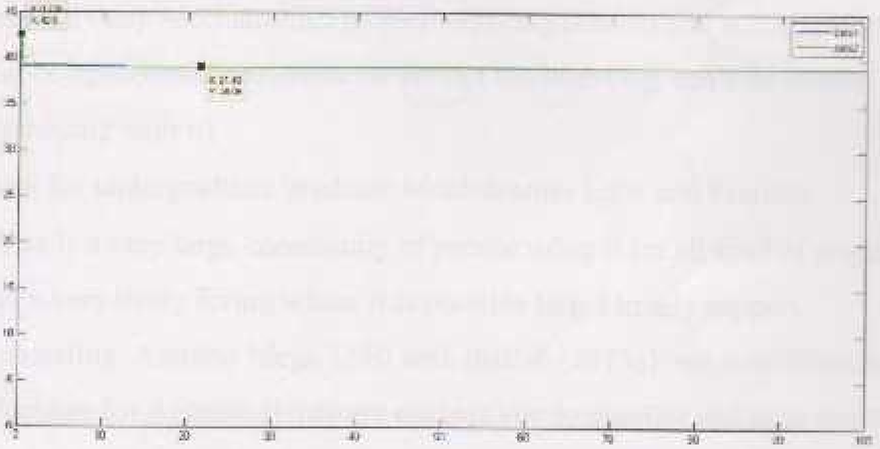

Figure (5.7)the step response of the angular position for motor's drum

The responses in the figure(5.7) are matching the requirement design of the PID controller and seen the same response result between the reference position and the actual true position which user interest.

5.2 Implementation result

5.2.1 Communicating with Arduino Mega 2560

5.2.1.1Introduction

Arduino is an open-source microcontroller board, with an associated development environment.

What is Arduino good for?

- Basically any Mechatronics project requiring sensing and acting, provided that computational requirements are not too high (e.g. can't do image processing with it)
- Ideal for undergraduate/graduate Mechatronics Labs and Projects
- There is a very large community of people using it for all kind of projects, and a very lively forum where it is possible to get timely support

to Communicating Arduino Mega 2560 with matlab (2013a) we need Simulink Support Package for Arduino Hardware enables you to monitor and tune algorithms running on Arduino Mega 2560 board from the same Simulink models from which you developed the algorithms.

Arduino IO Package: Used to perform analog and digital input and output as well as motor control from the MATLAB command line.

Arduino Target: Used to compile and download Simulink code directly to
The Arduino board

5.2.1.2 Analog & Digital IO that use in model control

Analog input block

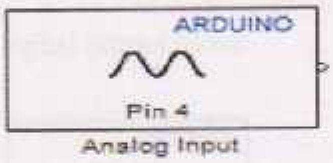

Measure the voltage of an analog pin relative to the analog input reference voltage on the Arduino hardware Output the measurement as a 10-bit value that ranges from 0 to 1023.If the measured voltage equals the ground voltage,the block outputs 0.If the measured voltage equals the analog referencevoltage, the block outputs 1023.The default value of the analog input reference voltage is 0to 5 V

Pulse width modulation plock

Use pulse-width modulation (PWM) to change the duty-cycle of square-wave pulses output by a PWM pin on the Arduino hardware. PWM enables a digital output to provide a range of different power levels, similar to that of an analog output.The value sent to the block input determines the width of thesquare wave, called duty-cycle, that the target hardware outputs on the specified PWM pin. The range of valid outputs is 0 to 255.

Digital input block

Get the logical value of a digital pin on the Arduino hardware:If the logical value of the digital pin is LOW, the block outputs 0.If the logical value of the digital pin is HIGH, the block outputs

Digital output block

Set the logical value of a digital pin on the Arduino hardware:

- Sending 1 to the block input sets the logical value of the digital pin HIGH to 5 V or 3.3 V, depending on the board voltage.
- Sending 0 to the block input sets the logical value of the digital pin LOW to 0 V.The block input inherits the data type of the upstream block, and internally converts it to boolean.

5.2.2 Model control implementation for one unit of DC motor

This model consist from a PID controller and some of gains and Arduino input output blocks and step input ,so when apply a step input for this model this value of the step go to the PID controller and after that to the arduino input/output pins and to the motor to drive it, as seen in figure(5.8).

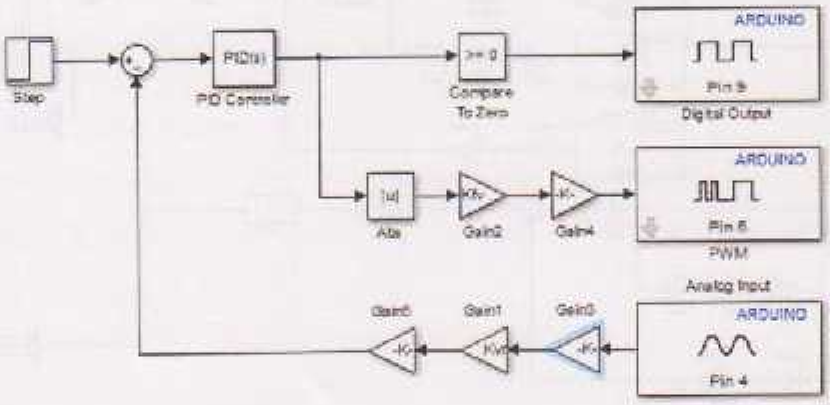

Figure (5.8) DC control model with aurdion

Description of the gains

- Gain3: Knv=5/1024; %To convert from 10bit number to voltage
- Gain1: Kvr=(5/10)*(2*pi); %To convert from voltage to radian
- Gain5: Krm=1; %To convert from radian to meter
- Gain4: Kvd=256/5; %To convert from voltage to duty cycle
- Gain2: Kfv=1; %To convert from force to voltage

The final real control model

The final control model is describe the kind of control is used and the input of the system and the output of the system and the number of bins of microcontroller which is used and the gains that convert the data, so when we apply three step input (x,y,z)is come from the user of the system and this value is substitute in the length of the cables equation (L1,L2,L3),so the value of the length cables is substract and the value of the sensor is the input for the three PID controller for three motors , as seen in figure(5.9).

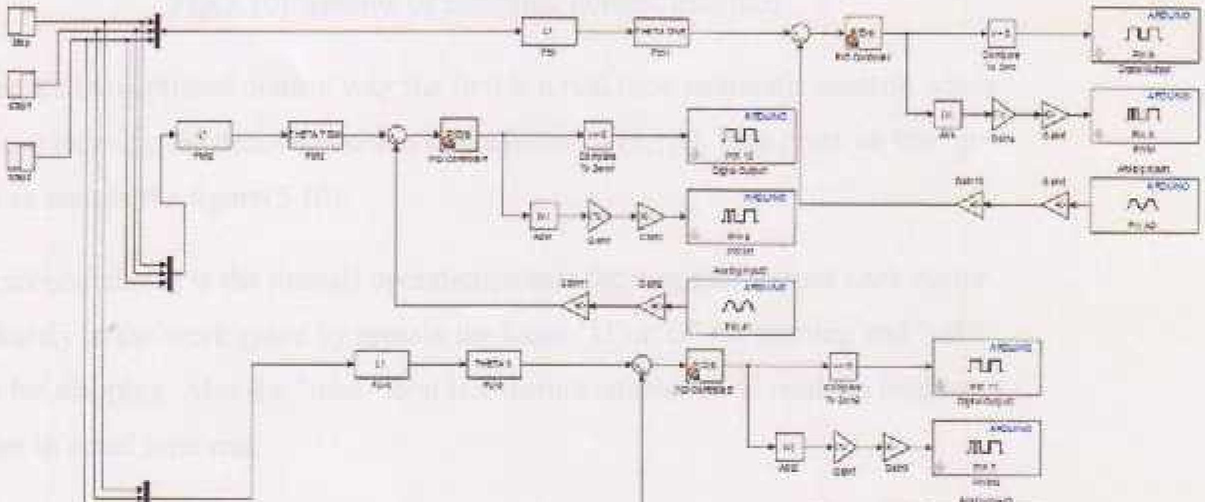

Figure (5.9) final real control model

5.2.3 Interface Result

The software interface which is used to control the model is a combination of a C Sharpe interface with visual studio 2010 which runs a real-time interfacing. In the current setup of the visual studio interface. The experimental setup of the system was done according the simplified model. All parameters and the reference trajectory were the same as in the simulation part

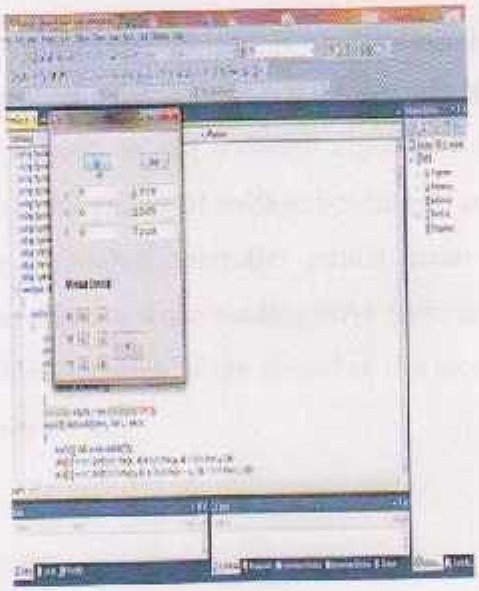

Fig(5.10) window of computer control interface

There are two optional control way the first is a real time automatic control where the user entering the desired position in the terms of (x,y,z), then press on the "go" icon as seen in the figure(5.10).

The second choice is the manual operation;where the user can control each motor separately in the work space by pressin the icons "U"or"D" for running and "off" icon for stopping .Also the "read" icon is a feature enables us to read the lengths of cables in a real time run.

Chapter six

Conclusion

The main problem with the identification of the model for the motors was that the motors were very fast. This meant that the software interfaced connected to to motors could not sample fast enough, without inducing aliasing of the measurement data. This meant that the identified models were not totally reliable, and also that it would be hard to control the motors. In the software algorithm of the controller there is limitation to sample the small values of voltage because of consider that the sampling time is treat with the derivative controller which mean having a big value of derivative gain, therefore there is some reading error from the feedback sensor on the motor.So, Due to the characteristics of the model of the motor, the controller needed to amplify high frequencies a lot.

Recommendation

It is possible for anyone who wants to project development Avoid the following problems which mention in conclusion and work to improve the mechanical and electrical systems in the overall stricter. While taking into account the stretch in the cables and may be adding GPS system to Suspended object to facilitate locate object in workspace.

The simulations of the motor showed that the control structure was a bit sensitive to noise, this might be something one can improve upon A better approach would have been to identify one model for the motor with only the pulley connected, since the effect of the load is canceled by the feed forward term in the controller for the reduced bandwidth design.

There is the possibility to add a fourth motor to control the dead corner where there fixed cable, and therefore the possibility of controlling the private space of those angled for control of the entire space meticulously.

```
Q =
       [ m*xb
        m*yb
  -m*(g - zb)]
```

```
D=inv(A)
```

```
[               -(((a^2 - 2*a*y + b^2 - 2*b*x + x^2 + y^2 + z^2)^(1/2) + (a^2 - 2*a*y + x^2 + y^2 + z^2)^(1/2))*(x^2
+ y^2 + z^2)^(1/2))/(b*(a^2 - 2*a*y + x^2 + y^2 + z^2)^(1/2) + b*(a^2 - 2*a*y + b^2 - 2*b*x + x^2 + y^2 +
z^2)^(1/2)),                -((x^2 + y^2 + z^2)^(1/2)*(a^2 - 2*a*y + b^2 - 2*b*x + x^2 + y^2 + z^2)^(1/2))/(a*(a^2 -
2*a*y + x^2 + y^2 + z^2)^(1/2) + a*(a^2 - 2*a*y + b^2 - 2*b*x + x^2 + y^2 + z^2)^(1/2)), ((x^2 + y^2 +
z^2)^(1/2)*(a*x*(a^2 - 2*a*y + b^2 - 2*b*x + x^2 + y^2 + z^2)^(1/2) - a*b*(a^2 - 2*a*y + x^2 + y^2 + z^2)^(1/2) -
a*b*(a^2 - 2*a*y + b^2 - 2*b*x + x^2 + y^2 + z^2)^(1/2) + b*y*(a^2 - 2*a*y + b^2 - 2*b*x + x^2 + y^2 + z^2)^(1/2) +
a*x*(a^2 - 2*a*y + x^2 + y^2 + z^2)^(1/2)))/(a*b*z*(a^2 - 2*a*y + b^2 - 2*b*x + x^2 + y^2 + z^2)^(1/2) + a*b*z*(a^2
- 2*a*y + x^2 + y^2 + z^2)^(1/2))]
[
0, ((a^2 - 2*a*y + x^2 + y^2 + z^2)^(1/2)*(a^2 - 2*a*y + b^2 - 2*b*x + x^2 + y^2 + z^2)^(1/2))/(a*(a^2 - 2*a*y + x^2
+ y^2 + z^2)^(1/2) + a*(a^2 - 2*a*y + b^2 - 2*b*x + x^2 + y^2 + z^2)^(1/2)),
-(y*(a^2 - 2*a*y + x^2 + y^2 + z^2)^(1/2)*(a^2 - 2*a*y + b^2 - 2*b*x + x^2 + y^2 + z^2)^(1/2))/(a*z*(a^2 - 2*a*y +
b^2 - 2*b*x + x^2 + y^2 + z^2)^(1/2) + a*z*(a^2 - 2*a*y + x^2 + y^2 + z^2)^(1/2))]
[ (((a^2 - 2*a*y + b^2 - 2*b*x + x^2 + y^2 + z^2)^(1/2) + (a^2 - 2*a*y + x^2 + y^2 + z^2)^(1/2))*(b^2 - 2*b*x + x^2
+ y^2 + z^2)^(1/2))/(b*(a^2 - 2*a*y + x^2 + y^2 + z^2)^(1/2) + b*(a^2 - 2*a*y + b^2 - 2*b*x + x^2 + y^2 +
z^2)^(1/2)),                -((a^2 - 2*a*y + x^2 + y^2 + z^2)^(1/2)*(b^2 - 2*b*x + x^2 + y^2 + z^2)^(1/2))/(a*(a^2 -
2*a*y + x^2 + y^2 + z^2)^(1/2) + a*(a^2 - 2*a*y + b^2 - 2*b*x + x^2 + y^2 + z^2)^(1/2)),
-((a*x*(a^2 - 2*a*y + b^2 - 2*b*x + x^2 + y^2 + z^2)^(1/2) + a*x*(a^2 - 2*a*y + x^2 + y^2 + z^2)^(1/2) - b*y*(a^2 -
2*a*y + x^2 + y^2 + z^2)^(1/2))*(b^2 - 2*b*x + x^2 + y^2 + z^2)^(1/2))/(a*b*z*(a^2 - 2*a*y + b^2 - 2*b*x + x^2 + y^2
+ z^2)^(1/2) + a*b*z*(a^2 - 2*a*y + x^2 + y^2 + z^2)^(1/2))]
```

```
%%%%%%%%%%%%%%%%%%%%%%%%%%%%%%
% torque for cable 2
%%%%%%%%%%%%%%%%%%%%%%%%%%%%%%

L2 = ( x^2   +   ((a-y)^2 )   + z^2 )^0.5
L2b = ((    (x*xb)      + ((y-a)*yb) + z*zb ))/L2
L2s =((    (x*xs+ xb^2)        + ((y-a)*ys + yb^2)+ (z*zs+ zb^2) ) - (L2b^2) )/(L2)
F2=(m*yb*(a^2 - 2*a*y + x^2 + y^2 + z^2)^(2/2)*(a^2 - 2*a*y + b^2 - 2*b*x + x^2 + y^2 +
z^2)^(2/2))/(a*(a^2 - 2*a*y + x^2 + y^2 + z^2)^(2/2) + a*(a^2 - 2*a*y + b^2 - 2*b*x + x^2 + y^2
+ z^2)^(2/2)) + (m*y*(g - zb)*(a^2 - 2*a*y + x^2 + y^2 + z^2)^(2/2)*(a^2 - 2*a*y + b^2 - 2*b*x +
x^2 + y^2 + z^2)^(2/2))/(a*z*(a^2 - 2*a*y + b^2 - 2*b*x + x^2 + y^2 + z^2)^(2/2) + a*z*(a^2 -
2*a*y + x^2 + y^2 + z^2)^(2/2))
F2b = F2+  ((m2*g*z)/L2) -m2*L2s
Tm2 = J0*(L2s/r)+F2b*r
simplify(Tm2)
Tm2 = r*((g*m2*z)/(x^2 + z^2 + (a - y)^2)^(1/2) - (m2*(x*xs + z*zs - ys*(a - y) - (x*xb + z*zb -
yb*(a - y))^2/(x^2 + z^2 + (a - y)^2) + xb^2 + yb^2 + zb^2))/(x^2 + z^2 + (a - y)^2)^(1/2) +
(m*yb*(a^2 - 2*a*y + x^2 + y^2 + z^2)*(a^2 - 2*a*y + b^2 - 2*b*x + x^2 + y^2 + z^2))/(a*(a^2 -
2*a*y + b^2 - 2*b*x + x^2 + y^2 + z^2) + a*(a^2 - 2*a*y + x^2 + y^2 + z^2)) + (m*y*(g - zb)*(a^2
- 2*a*y + x^2 + y^2 + z^2)*(a^2 - 2*a*y + b^2 - 2*b*x + x^2 + y^2 + z^2))/(a*z*(a^2 - 2*a*y +
b^2 - 2*b*x + x^2 + y^2 + z^2) + a*z*(a^2 - 2*a*y + x^2 + y^2 + z^2))) + (J0*(x*xs + z*zs -
ys*(a - y) - (x*xb + z*zb - yb*(a - y))^2/(x^2 + z^2 + (a - y)^2) + xb^2 + yb^2 + zb^2))/(r*(x^2
+ z^2 + (a - y)^2)^(1/2))
```

```
%%%%%%%%%%%%%%%%%%%%%%%%%%%%%%%%%%%%%%
% torque for cable 3
%%%%%%%%%%%%%%%%%%%%%%%%%%%%%%%%%%%%%%

L4 = ( ((b-x)^2)    + y^2 + z^2 )^0.5
L4b = ( (    (x-b)*xb     + y*yb + z*zb ))/L4
L4s =((    ((x-b)*xs + xb^2)      + (y*ys + yb^2)+ (z*zs+ zb^2) ) - (L4b^2 ) )/(L4)
F3=  (m*xb*((a^2 - 2*a*y + b^2 - 2*b*x + x^2 + y^2 + z^2)^(1/2) + (a^2 - 2*a*y + x^2 + y^2 +
z^2)^(1/2))*(b^2 - 2*b*x + x^2 + y^2 + z^2)^(1/2))/(b*(a^2 - 2*a*y + x^2 + y^2 + z^2)^(1/2) +
b*(a^2 - 2*a*y + b^2 - 2*b*x + x^2 + y^2 + z^2)^(1/2)) - (m*yb*(a^2 - 2*a*y + x^2 + y^2 +
z^2)^(1/2)*(b^2 - 2*b*x + x^2 + y^2 + z^2)^(1/2))/(a*(a^2 - 2*a*y + x^2 + y^2 + z^2)^(1/2) +
a*(a^2 - 2*a*y + b^2 - 2*b*x + x^2 + y^2 + z^2)^(1/2)) + (m*(g - zb)*(a*x*(a^2 - 2*a*y + b^2 -
2*b*x + x^2 + y^2 + z^2)^(1/2) + a*x*(a^2 - 2*a*y + x^2 + y^2 + z^2)^(1/2) - b*y*(a^2 - 2*a*y +
x^2 + y^2 + z^2)^(1/2))*(b^2 - 2*b*x + x^2 + y^2 + z^2)^(1/2))/(a*b*z*(a^2 - 2*a*y + b^2 - 2*b*x
+ x^2 + y^2 + z^2)^(1/2) + a*b*z*(a^2 - 2*a*y + x^2 + y^2 + z^2)^(1/2))
F3b = F3-   ((m3*g*z)/L4) -m3*L4s
Tm3 = J0*(L4s/r)+F3b*r
simplify(Tm3)
Tm3 =
r*((g*m3*z)/(y^2 + z^2 + (b - x)^2)^(1/2) - (m3*(y*ys + z*zs - xs*(b - x) - (y*yb + z*zb - xb*(b
- x))^2/(y^2 + z^2 + (b - x)^2) + xb^2 + yb^2 + zb^2))/(y^2 + z^2 + (b - x)^2)^(1/2) +
(m*xb*((a^2 - 2*a*y + b^2 - 2*b*x + x^2 + y^2 + z^2)^(1/2) + (a^2 - 2*a*y + x^2 + y^2 +
z^2)^(1/2))*(b^2 - 2*b*x + x^2 + y^2 + z^2)^(1/2))/(b*(a^2 - 2*a*y + x^2 + y^2 + z^2)^(1/2) +
b*(a^2 - 2*a*y + b^2 - 2*b*x + x^2 + y^2 + z^2)^(1/2)) - (m*yb*(a^2 - 2*a*y + x^2 + y^2 +
z^2)^(1/2)*(b^2 - 2*b*x + x^2 + y^2 + z^2)^(1/2))/(a*(a^2 - 2*a*y + x^2 + y^2 + z^2)^(1/2) +
a*(a^2 - 2*a*y + b^2 - 2*b*x + x^2 + y^2 + z^2)^(1/2)) + (m*(g - zb)*(a*x*(a^2 - 2*a*y + b^2 -
2*b*x + x^2 + y^2 + z^2)^(1/2) + a*x*(a^2 - 2*a*y + x^2 + y^2 + z^2)^(1/2) - b*y*(a^2 - 2*a*y +
x^2 + y^2 + z^2)^(1/2))*(b^2 - 2*b*x + x^2 + y^2 + z^2)^(1/2))/(a*b*z*(a^2 - 2*a*y + b^2 - 2*b*x
+ x^2 + y^2 + z^2)^(1/2) + a*b*z*(a^2 - 2*a*y + x^2 + y^2 + z^2)^(1/2))) + (J0*(y*ys + z*zs -
xs*(b - x) - (y*yb + z*zb - xb*(b - x))^2/(y^2 + z^2 + (b - x)^2) + xb^2 + yb^2 + zb^2))/(r*(y^2
+ z^2 + (b - x)^2)^(1/2))
```

THERMAL DATA

Symbol	Parameter		Value				Unit
			L6201	L6201PS	L6202	L6203	
$R_{th\,j\text{-}pins}$	Thermal Resistance Junction-pins	max	15	–	12	–	°C/W
$R_{th\,j\text{-}case}$	Thermal Resistance Junction Case	max.	–	–	–	3	
$R_{th\,j\text{-}amb}$	Thermal Resistance Junction-ambient	max.	85	13 (*)	60	35	

(*) Mounted on aluminium substrate.

ELECTRICAL CHARACTERISTICS (Refer to the Test Circuits; T_j = 25°C, V_S = 42V, V_{sens} = 0, unless otherwise specified).

Symbol	Parameter	Test Conditions	Min.	Typ.	Max.	Unit
V_s	Supply Voltage		12	36	48	V
V_{ref}	Reference Voltage	I_{REF} = 2mA		13.5		V
I_{REF}	Output Current				2	mA
I_s	Quiescent Supply Current	EN = H V_{IN} = L EN = H V_{IN} = H I_L = 0 EN = L (Fig. 1,2,3)		10 10 8	15 15 15	mA mA mA
f_c	Commutation Frequency (*)			30	100	KHz
T_j	Thermal Shutdown			150		°C
t_d	Dead Time Protection			100		ns

TRANSISTORS

OFF						
I_{DSS}	Leakage Current	Fig. 11 V_s = 52 V			1	mA
ON						
R_{DS}	On Resistance	Fig. 4,5		0.3	0.55	Ω
$V_{DS(ON)}$	Drain Source Voltage	Fig. 9 I_{DS} = 1A **L6201** I_{DS} = 1.2A **L6202** I_{DS} = 3A **L6201PS/03**		0.3 0.36 0.9		V V V
V_{sens}	Sensing Voltage		– 1		4	V

SOURCE DRAIN DIODE

V_{fsd}	Forward ON Voltage	Fig. 6a and b I_{SD} = 1A **L6201** EN = L I_{SD} = 1.2A **L6202** EN = L I_{SD} = 3A **L6201PS/03** EN = L		0.9 (**) 0.9 (**) 1.35(**)		V V V
t_{rr}	Reverse Recovery Time	$\frac{dif}{dt}$ = 25 A/µs I_F = 1A L6201 I_F = 1.2A L6202 I_F = 3A L6203		300		ns
t_{fr}	Forward Recovery Time			200		ns

LOGIC LEVELS

V_{INL}, V_{ENL}	Input Low Voltage		– 0.3		0.8	V
V_{INH}, V_{ENH}	Input High Voltage		2		7	V
I_{INL}, I_{ENL}	Input Low Current	V_{IN}, V_{EN} = L			–10	µA
I_{INH}, I_{ENH}	Input High Current	V_{IN}, V_{EN} = H		30		µA

References

[1]J. L. Meriam, L. G. Kraige , Engineering Mechanics Statics , John Wiley & Sons, Inc., TA350.M458 2006 ,

[2] John J. Craig., introduction to robotics mechanics and control .Wesley Publishing Company, TJ211.C67, 1989

[3] Richard G. Budynas, J. Keith Nisbett. Shigley's mechanical engineering design , McGraw-Hill, Americas, New York, NY 10020., 2011

[4]Introduction to linear Algebras, Bernal Koloman ,Drexl University

[5] Differential Equation, Denes G. zill , 9th

[6] Richard G. Budynass and J. keith Nisbett, "Mechanical Engineering Design ", Ninth Edition, New York: McGraw-Hill.

[7]http://en.wikipedia.org/wiki/Arc_welding

[8]http://en.wikipedia.org/wiki/Gas_metal_arc_welding

[9] http://en.wikipedia.org/wiki/stepper_motor

[10] http://en.wikipedia.org/wiki/Dc_motors

[11] http://en.wikipedia.org/wiki/poteniometer

[12] http://en.wikipedia.org/wiki/ Control theory